Cell balancing

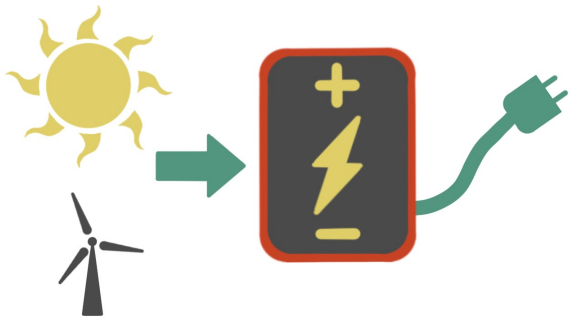

Ania's BMS Course

by Ania Mitros, PhD

© Ania Mitros, PhD, 2024

https://ofb.net/~ania/Anias-BMS-course/

Cell balancing

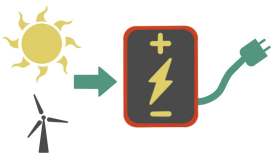

Video 1
- Introduction
- How much balancing current?

Video 2
- Passive vs Active balancing

Video 3
- Thermal considerations
  - …on PCB
  - …for BMS chips

Video 4
- When to balance
  - Relative to cell voltage measurement
  - At what SOC
    - LFP oh my!

© Ania Mitros, PhD, 2024

Cell balancing

Loose definition: Cell balancing equalizes the state of charge among multiple cells in a battery pack.

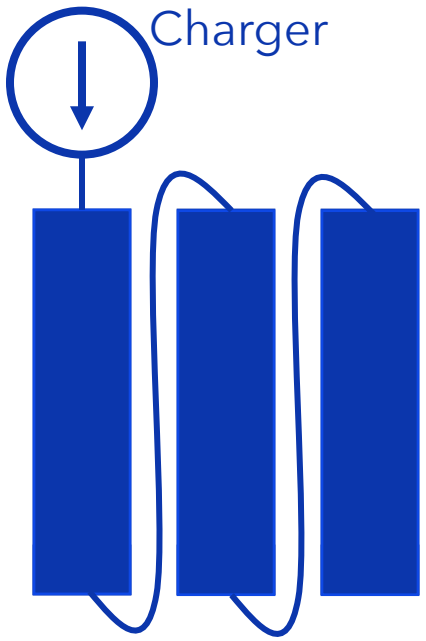

Ideally: All cells reach top of charge together

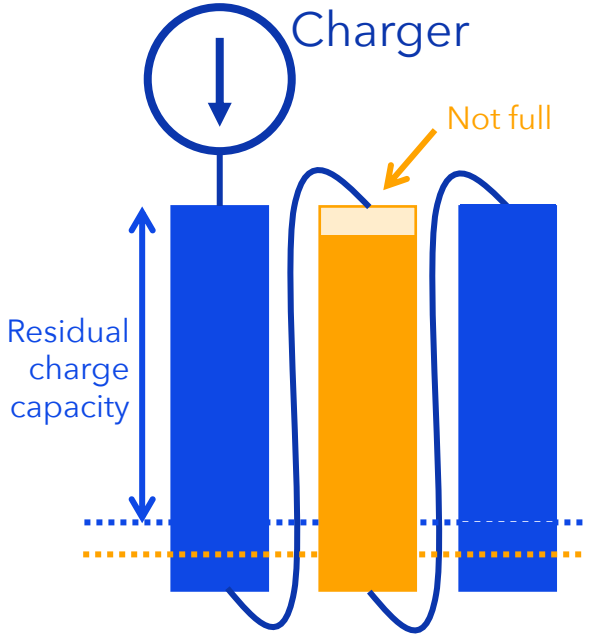

Reality: Without balancing

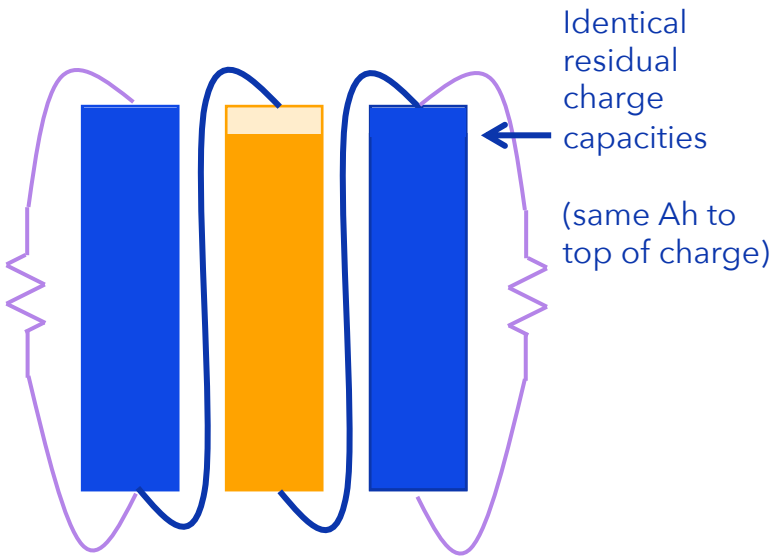

Balancing

Ideal balancing algorithm equalizes all cells' residual charge capacity (Ah to top of charge).

© Ania Mitros, PhD, 2024

Reasons for imbalance

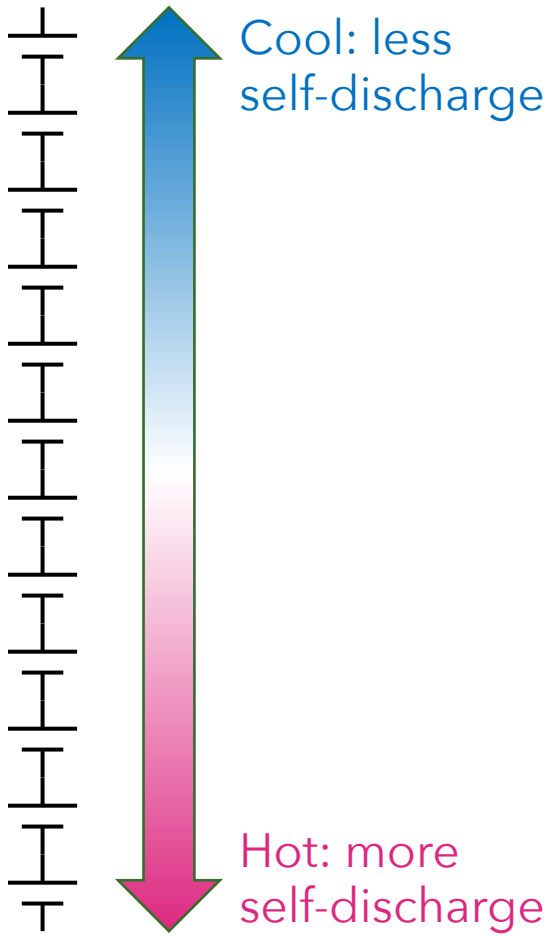

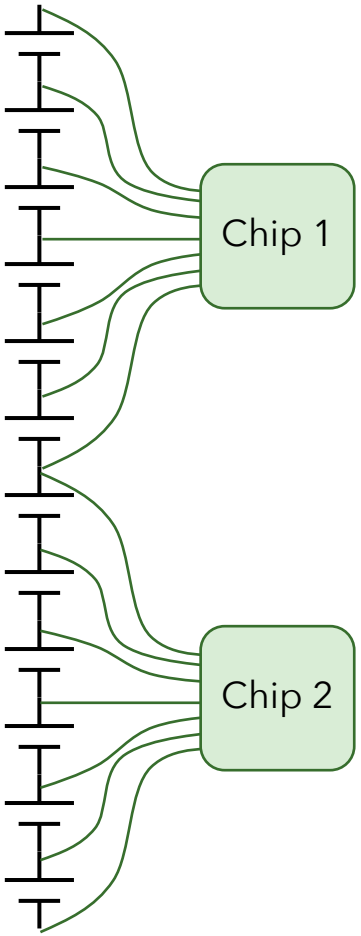

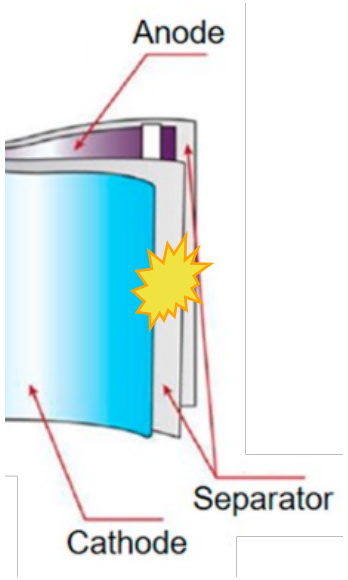

- Self-discharge
- Unequal load
- Faults or defects

© Ania Mitros, PhD, 2024

https://ofb.net/~ania/Anias-BMS-course/

Capacity differences don’t cause imbalance

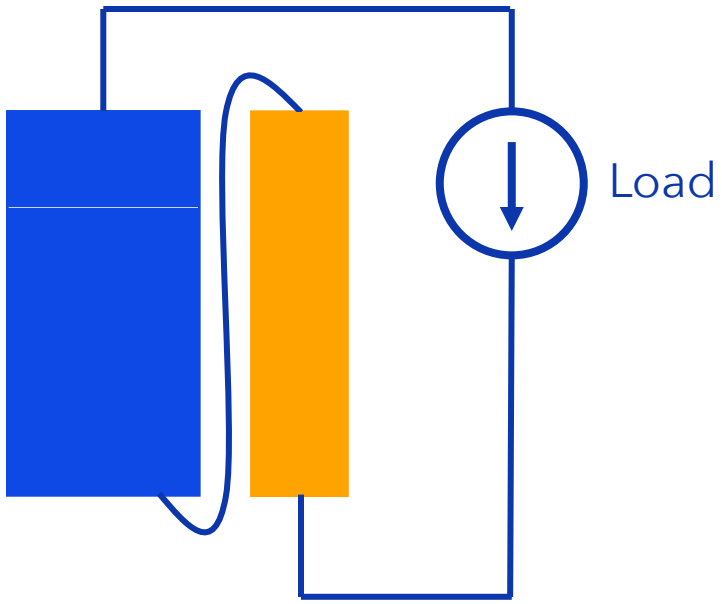

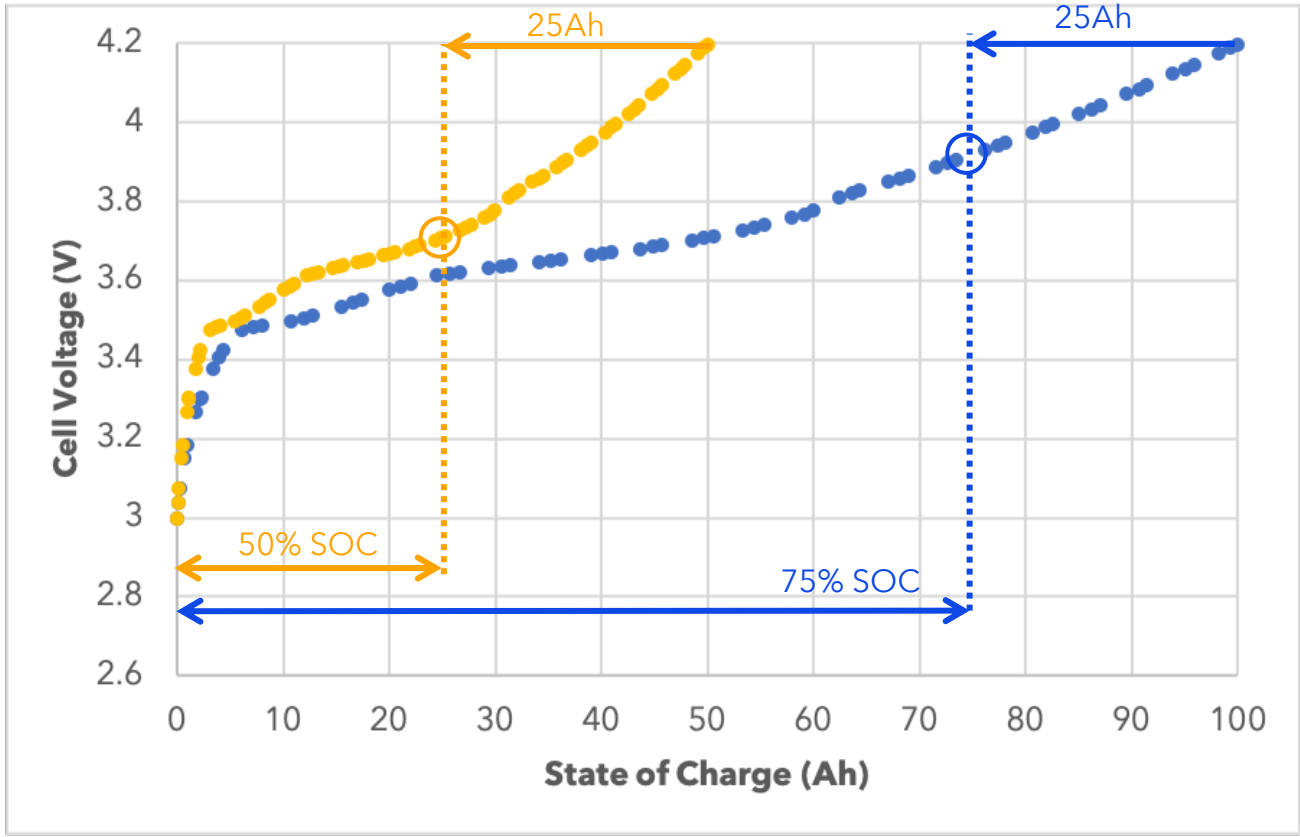

© Ania Mitros, PhD, 2024

Capacity differences don’t cause imbalance

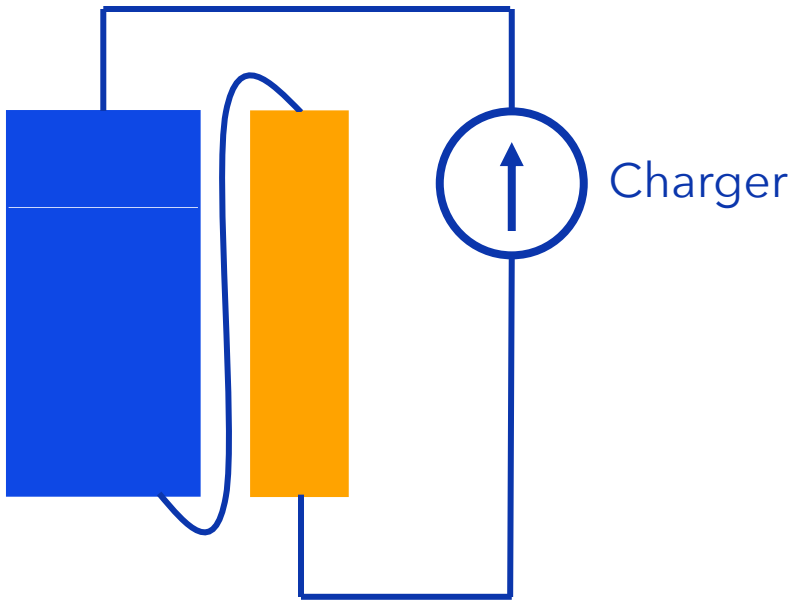

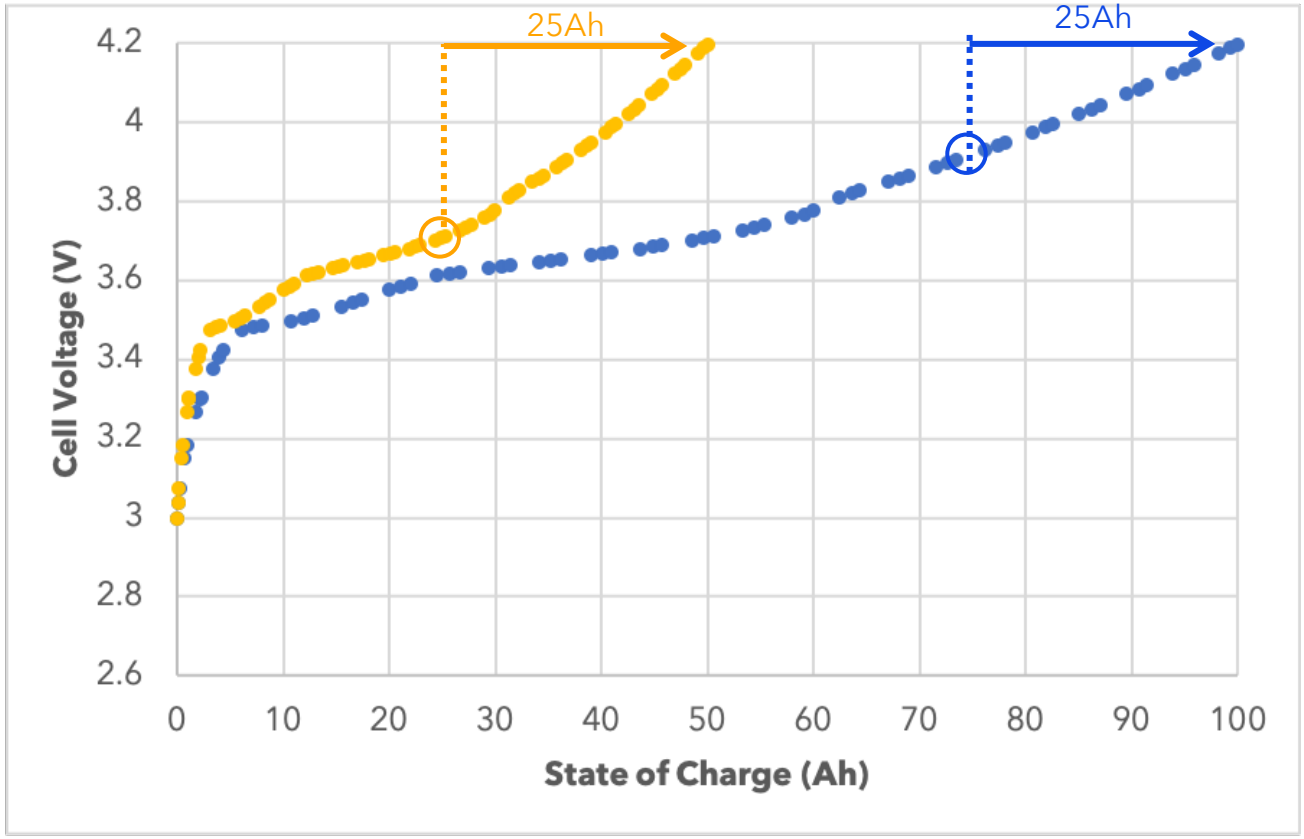

© Ania Mitros, PhD, 2024

Cell balancing

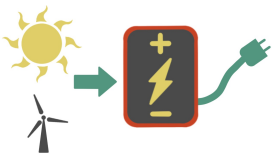

- Video 1 • Introduction
- • How much balancing current?
- Video 2 • Passive vs Active balancing
- Video 3 • Thermal considerations
  - …on PCB
  - …for BMS chips
- Video 4 • When to balance
  - Relative to cell voltage measurement
  - At what SOC
    - LFP oh my!

© Ania Mitros, PhD, 2024

How much balancing current?

	typ	max
Self-discharge		
Unequal load		
Faults or defects		

For a 200Ah battery

© Ania Mitros, PhD, 2024

Cell self-discharge vs temperature, voltage

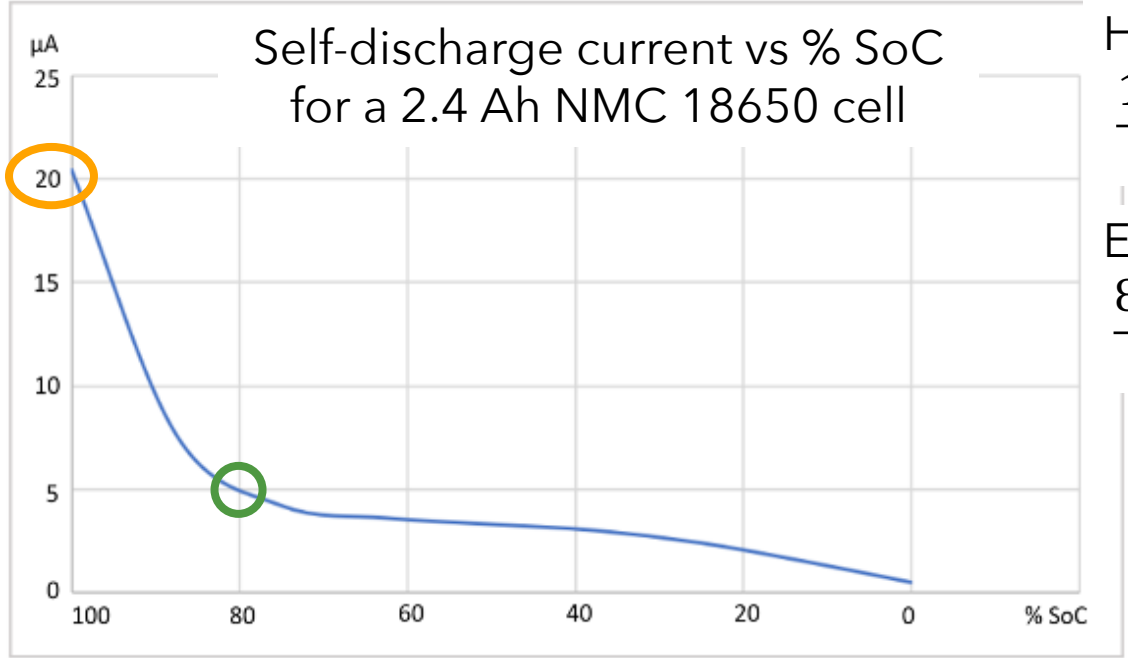

From Fig 3 in https://www.batterytechonline.com/testing-and-safety/measuring-lithium-ion-cell-self-discharge

Home energy:

$$\frac{10\ kWh}{50V} = 200\ Ah$$

Electric car:

$$\frac{80\ kWh}{400V} = 200\ Ah$$

Cool: less self-discharge

"One can expect the self-discharge to typically double for every 10°C rise."

Hot: more self-discharge

Self-discharge at 80% SoC, 25°C:

$$5\mu A \times \left(\frac{200\ Ah}{2.4\ Ah}\right) = 417\mu A$$ ← Typical

Self-discharge at 100% SoC, 45°C:

$$21\mu A \times \left(\frac{200\ Ah}{2.4\ Ah}\right) \times 2 \times 2 = 7mA$$ ← Worst case

© Ania Mitros, PhD, 2024

How much balancing current?

	typ	max
Self-discharge	417 μA	7 mA
Unequal load		
Faults or defects		

For a 200Ah battery

© Ania Mitros, PhD, 2024

Unequal load

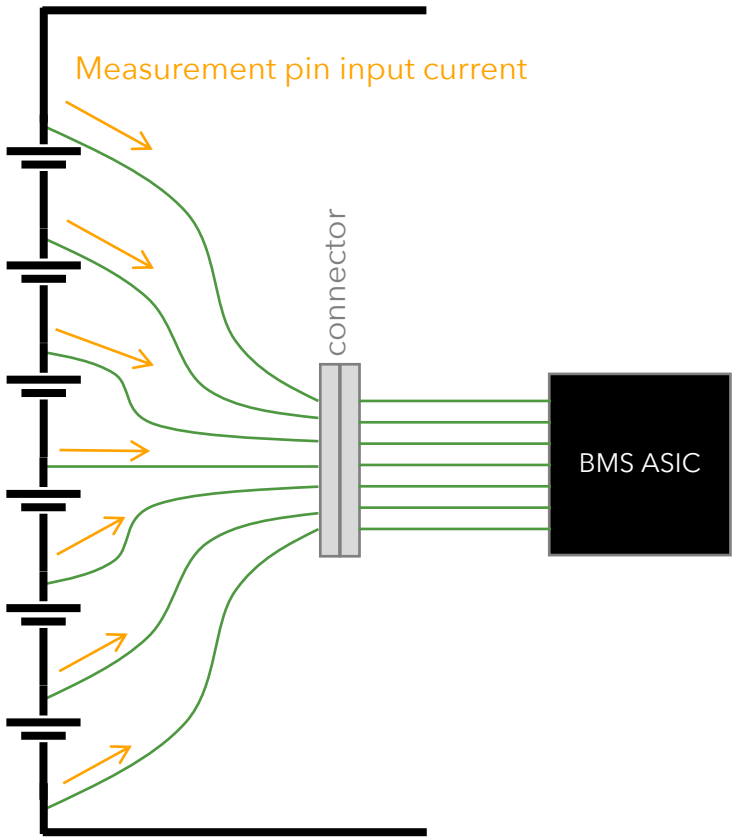

Texas Instruments

bq79616

PARAMETER		TEST CONDITIONS	MIN	TYP	MAX	UNIT
I_{VC_DELTA}	VCn to VCn-1 input current delta (when Main ADC is on)	T_A = -20°C to 65°C			1.8	µA
		T_A = -40°C to 105°C			2	µA
I_{VC}	VCn input current (when Main ADC is on)			8	12	µA

Analog Devices

LTC6813

SYMBOL	PARAMETER	CONDITIONS		MIN	TYP	MAX	UNITS
I_L	Input Leakage Current When Inputs Are Not Being Measured	C(n) n = 0 to 18	●		10	±250	nA
		GPIO(n) n = 1 to 9	●		10	±250	nA
	Input Current When Inputs Are Being Measured (State: Core = MEASURE)	C(n) n = 0 to 18			±1		µA
		GPIO(n) n = 1 to 9			±1		µA

Acronyms:

- BMS = Battery Monitoring System or Battery Management System
- ASIC = Application Specific Integrated Circuit (aka "a chip")
- AFE = Analog Front End, another name for a BMS chip or BMS ASIC

© Ania Mitros, PhD, 2024

Unequal load

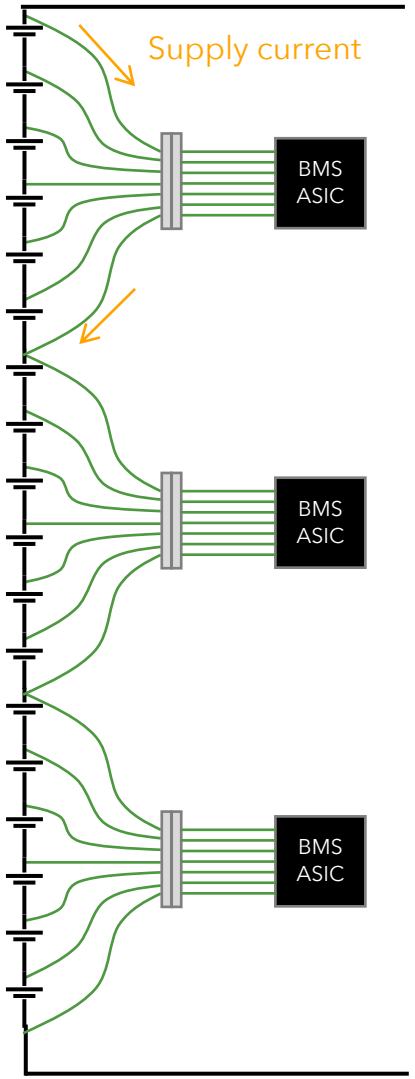

Analog Devices

LTC6813 Active mode: ~19mA ±3mA

SYMBOL	PARAMETER	CONDITIONS			MIN	TYP	MAX	UNITS
I_{VP}	V^+ Supply Current (See Figure 1: LTC6813-1 Operation State Diagram)	State: Core = SLEEP, isoSPI = IDLE	V_{REG} = 0V			6.1	11	µA
			V_{REG} = 0V	●		6.1	18	µA
			V_{REG} = 5V			3	5	µA
			V_{REG} = 5V	●		3	9	µA
					9 6	14 14	22 28	µA µA
				●	0.4 0.375	0.55 0.55	0.8 0.825	mA mA
				●	0.65 0.6	0.95 0.95	1.35 1.4	mA mA
			= 5V			3.1	6	µA
			= 5V	●		3.1	9	µA
					10 6	35 35	60 65	µA µA
				●	0.4 0.3	0.9 0.9	1.4 1.5	mA mA
				●	14 13.5	15 15	16 16.5	mA mA
			ADY	●	3.6	4.5	5.2	mA
			TIVE	●	5.6	6.8	8.1	mA
			ADY	●	4.0	5.2	6.5	mA
			TIVE	●	7.0	8.5	10.5	mA
			ADY	●	1.0	1.8	2.4	mA
			TIVE	●	1.3	2.3	3.3	mA
			ADY	●	1.6	2.5	3.5	mA
			TIVE	●	1.8	3.1	4.8	mA

Active mode: ~21mA ±??mA

Texas Instruments

bq79616

PARAMETER		TEST CONDITIONS	MIN	TYP	MAX	UNIT
$I_{ACT(IDLE)}$	Baseline supply current in ACTIVE mode	Sum of both I_{BAT} and I_{LDOIN} No fault, no communication, no protector comparator, no cell balancing		10.4	11.6	mA
I_{CB_EN}	Additional supply current when cell balancing is on	At least 1 cell balancing FET is on, OT_{CB} is enabled. Other functions are inactive		1	1.5	mA
$I_{PROTCOMP}$	Additional supply current when protector comparator is on	Either OV/UV/OT/UT protector is enabled. Other functions are inactive		20	60	µA
I_{TSREF}		SLEEP Mode, no load on TSREF pin		100		µA
I_{ADC}	Additional supply current when ADC is enabled	One ADC on, and conversion is in progress. Other functions are inactive		0.4	0.6	mA
		2 ADCs on, and conversion is in progress. Other functions are inactive		0.6	0.9	mA
I_{BAT}	Supply current goes into BAT pin	ACTIVE Mode		150		µA
		SLEEP Mode		25		µA
		SHUTDOWN Mode		5		µA
I_{COMT}	Additional supply current during daisy-chain broadcast read of 128-byte data	Use transformer isolation for daisy-chain interface		10		mA
I_{COMC}	Additional supply current during daisy-chain broadcast read of 128-byte data	Use capacitor or capacitor and choke isolation for daisy-chain interface		10		mA
I_{OW_SINK}	Sink current for open wire test, applies to VC1 to VC16 and CB1 to CB 16		380	500	600	µA
I_{OW_SOURCE}	Source current for open wire test, applies to VC0 and CB0		380	500	600	µA
I_{LEAK}	Leakage current on VC, CB pins	VC, CB pins with ADC off.			0.1	µA

© Ania Mitros, PhD, 2024

Unequal load

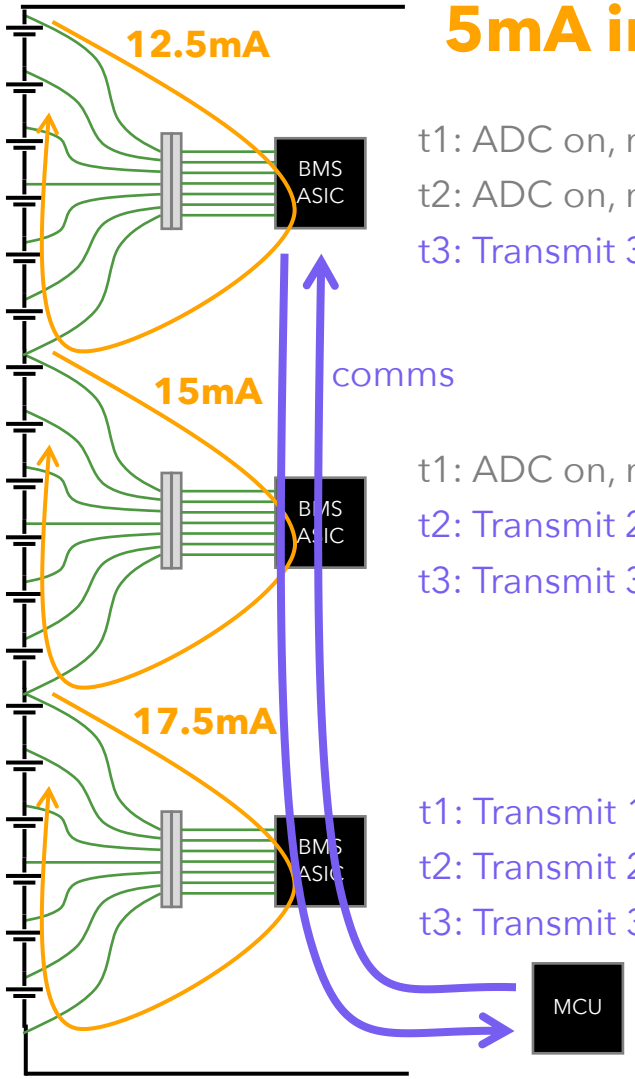

5mA imbalance

t1: ADC on, no comms: 10mA
t2: ADC on, no comms: 10mA
t3: Transmit 3rd chip data : 20mA

t1: ADC on, no comms: 10mA
t2: Transmit 2nd chip data : 20mA
t3: Transmit 3rd chip data : 20mA

t1: Transmit 1st chip data : 20mA
t2: Transmit 2nd chip data : 20mA
t3: Transmit 3rd chip data : 20mA

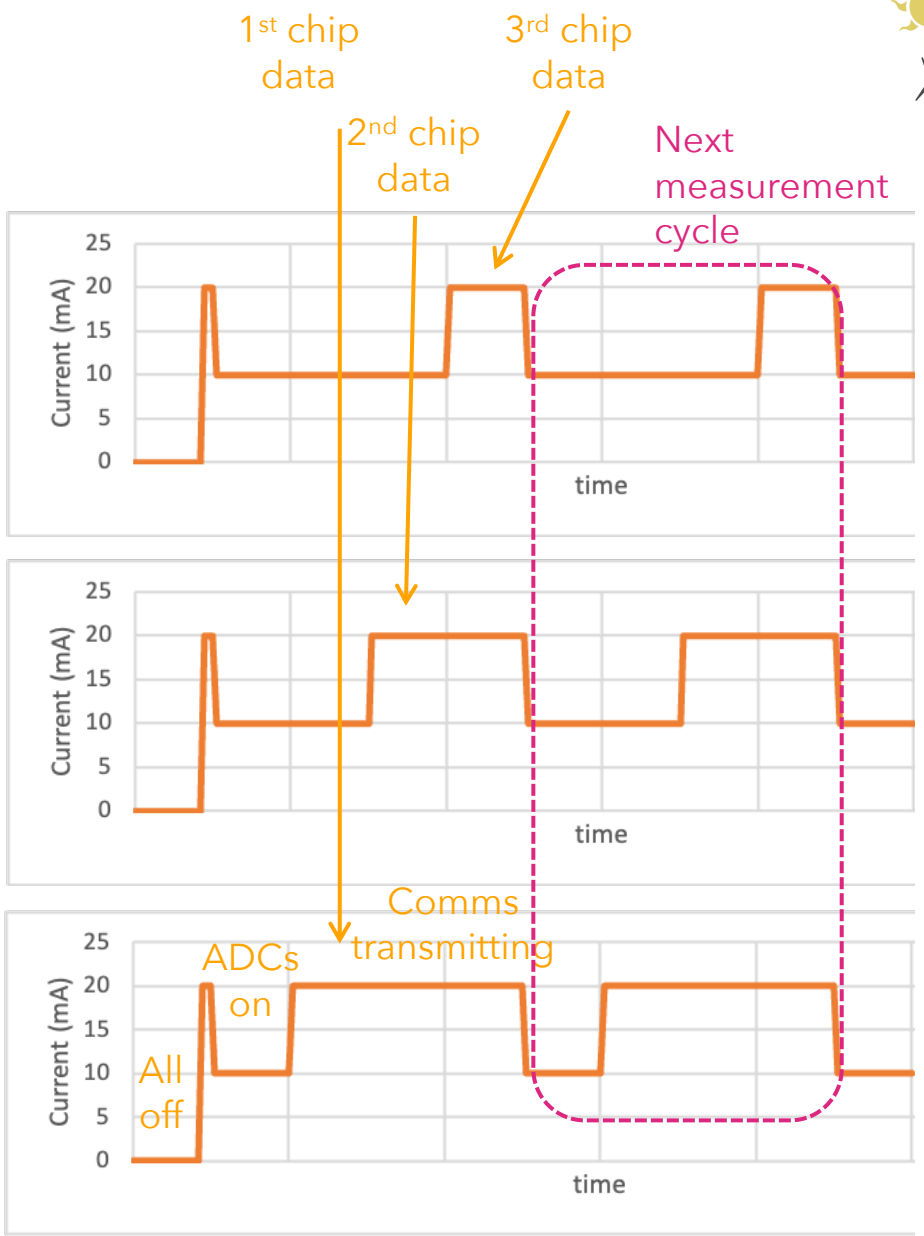

© Ania Mitros, PhD, 2024

https://ofb.net/~ania/Anias-BMS-course/

Improved daisy-chain architecture

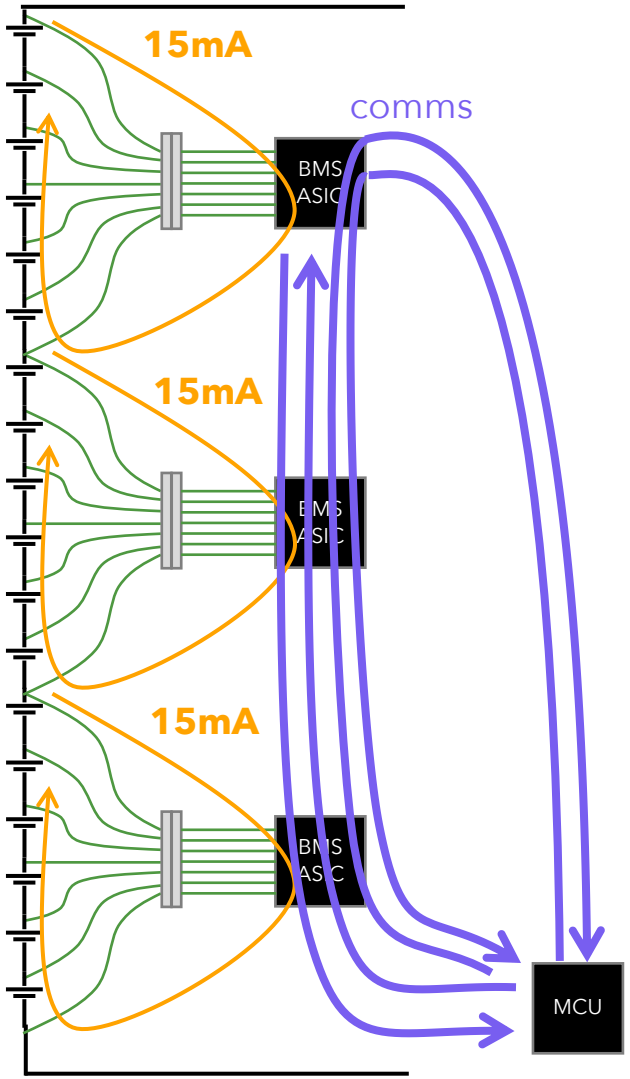

Nominally equal average currents over 2 measurement cycles

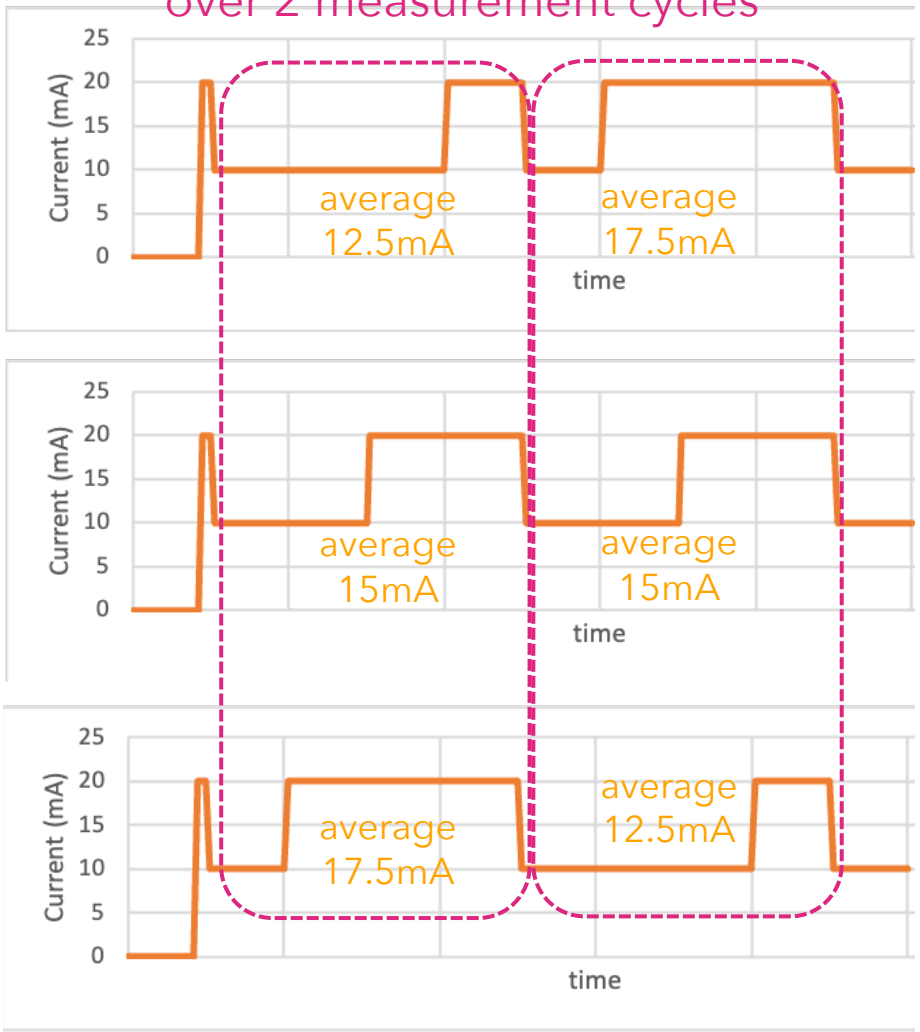

© Ania Mitros, PhD, 2024

https://ofb.net/~ania/Anias-BMS-course/

Unequal load with loop daisy-chain

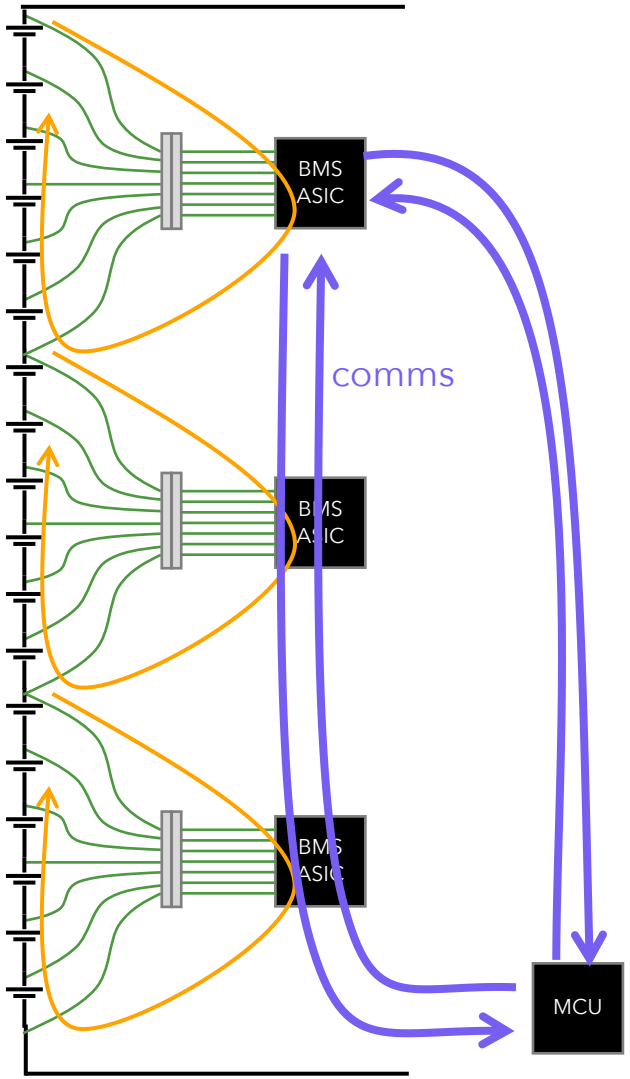

MIN	TYP	MAX	UNITS
	20	23	mA

Supply current: ~20mA ±3mA

±3mA : Some from temperature variation
Some from chip-to-chip variation

→ **~1.5mA chip-to-chip variation (max) at equal temperature**

© Ania Mitros, PhD, 2024

How much balancing current?

	typ	max
Self-discharge	417 μA	7 mA
Unequal load	<1.5mA	1.5mA
Faults or defects		

A conservative analysis would use the ~3mA datasheet max variation

For a 200Ah battery

© Ania Mitros, PhD, 2024

Imbalance due to faults or defects

Varies with manufacturing quality

When is a fault tolerable, and when does it foreshadow something worse?

?

© Ania Mitros, PhD, 2024

How much balancing current?

	typ	max
Self-discharge	417 μA	7 mA
Unequal load	<1.5mA	1.5mA
Faults or defects	0	8.5mA

For a 200Ah battery

Total	<1mA	17mA

Perhaps… allocate same amount to faults as to normal operation?

© Ania Mitros, PhD, 2024

Balancing: Perspective

Imbalance in a 200Ah battery pack:

Self-discharge at 80% SoC, 25°C:

$$5\mu A \times \left(\frac{200\ Ah}{2.4\ Ah}\right) = 417\mu A$$ ← Typical

Self-discharge at 100% SoC & 45°C, unequal loads, faults: $17mA$ ← Worst case

Plausible system currents:

- 1500 A peak current (7.5C) for peak acceleration
- 200 A continuous current (1C)
- Tesla Sentry mode: $I = \frac{250W}{400V} = 625mA$ from 400V battery
- Headlights: $I = \frac{70W}{400V} = 175mA$ from 400V battery
- 1 W MCU: $I = \frac{1W}{50V} = 20mA$ from a 50V battery

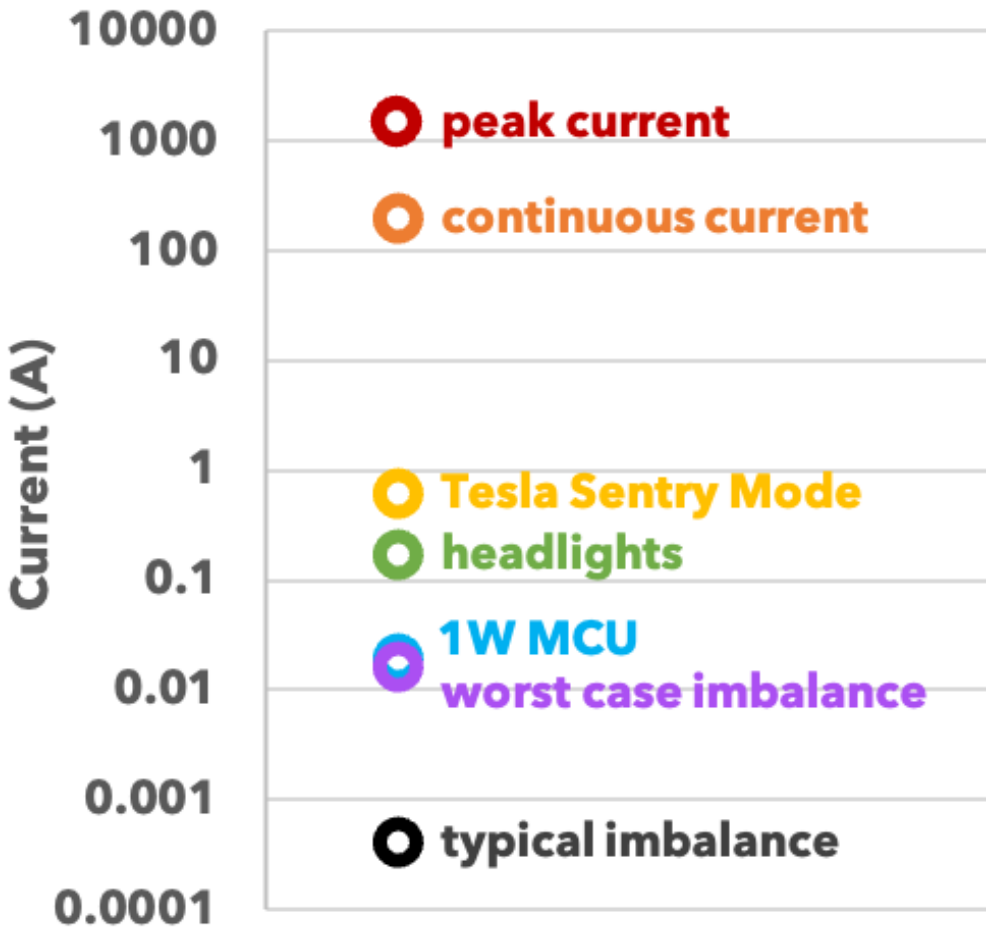

© Ania Mitros, PhD, 2024

Balancing: Summary so far

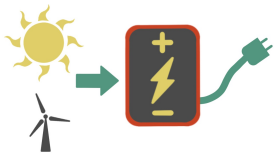

- Equalizes cells' voltage or state of charge
  - Ideally: equalizes residual charge capacity (Ah to top of charge)
- Compensates for unequal discharge
  - Self-discharge
  - Unequal loads
  - Faults or manufacturing defects
- Small relative to other system currents

This is "top balancing".

© Ania Mitros, PhD, 2024

Cell balancing

Video 1
- Introduction
- How much balancing current?

Video 2
- Passive vs Active balancing

Video 3
- Thermal considerations
  - …on PCB
  - …for BMS chips

Video 4
- When to balance
  - Relative to cell voltage m
  - At what SOC
    - LFP oh my!

© Ania Mitros, PhD, 2024

Cell balancing

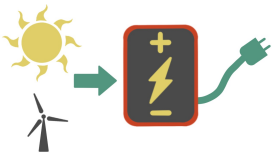

- Video 1 Introduction
- How much balancing current?
- Video 2 Passive vs Active balancing
- Video 3 Thermal considerations
  - …on PCB
  - …for BMS chips
- Video 4 When to balance
  - Relative to cell voltage measurement
  - At what SOC
    - LFP oh my!

© Ania Mitros, PhD, 2024

Passive & active balancing

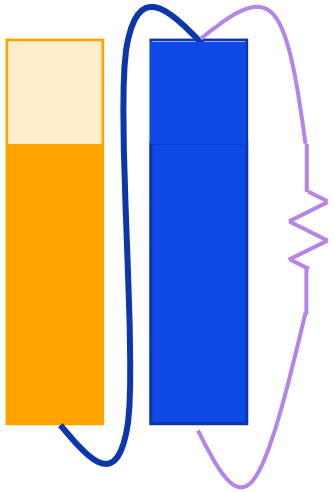

Passive Balancing

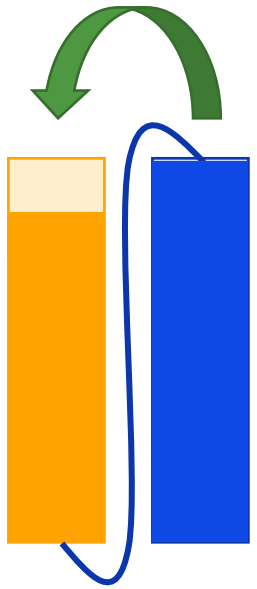

Active Balancing

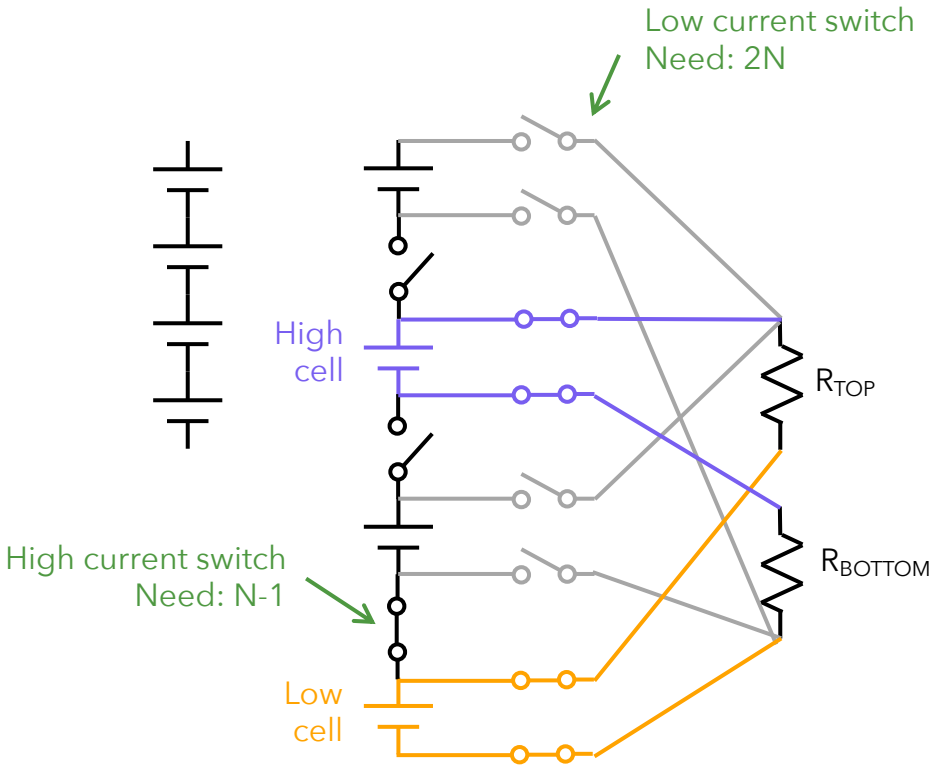

Active Balancing: Switches

This topology balances one pair at a time.

Application disabled during balancing

Exercise: Estimate the cost

- 12-14 cells (stationary storage)
- 100 series cells (automotive)

© Ania Mitros, PhD, 2024

Active balancing with storage elements

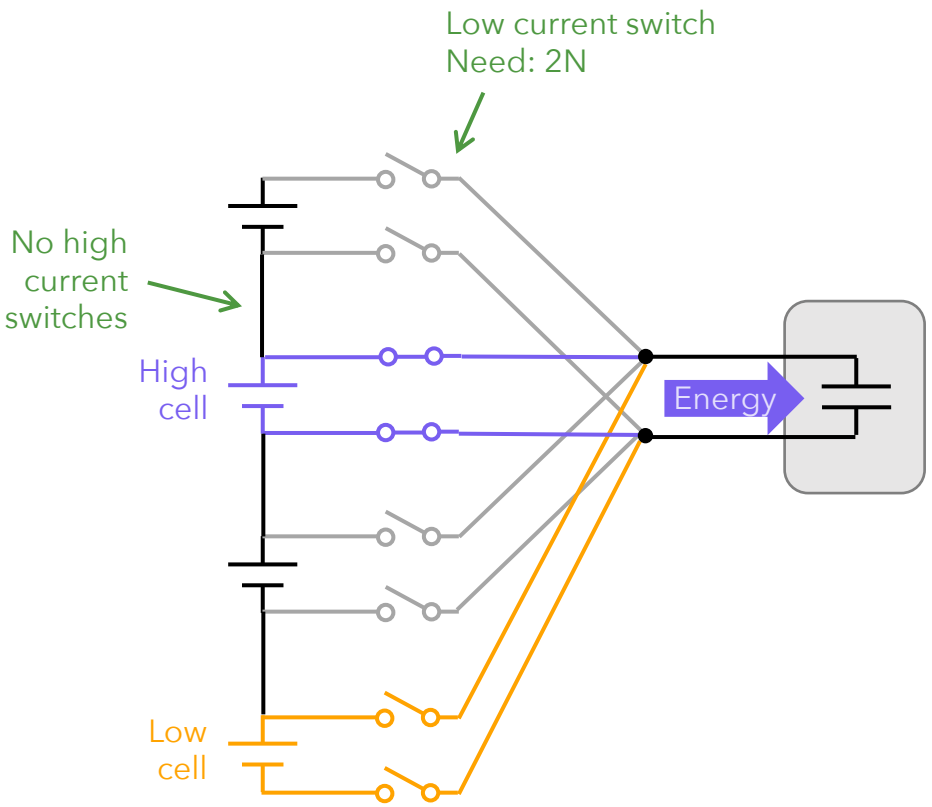

Storage circuit incorporating either:

- Capacitor
- Inductor

Active Balancing: Storage elements

© Ania Mitros, PhD, 2024

Active balancing with storage elements

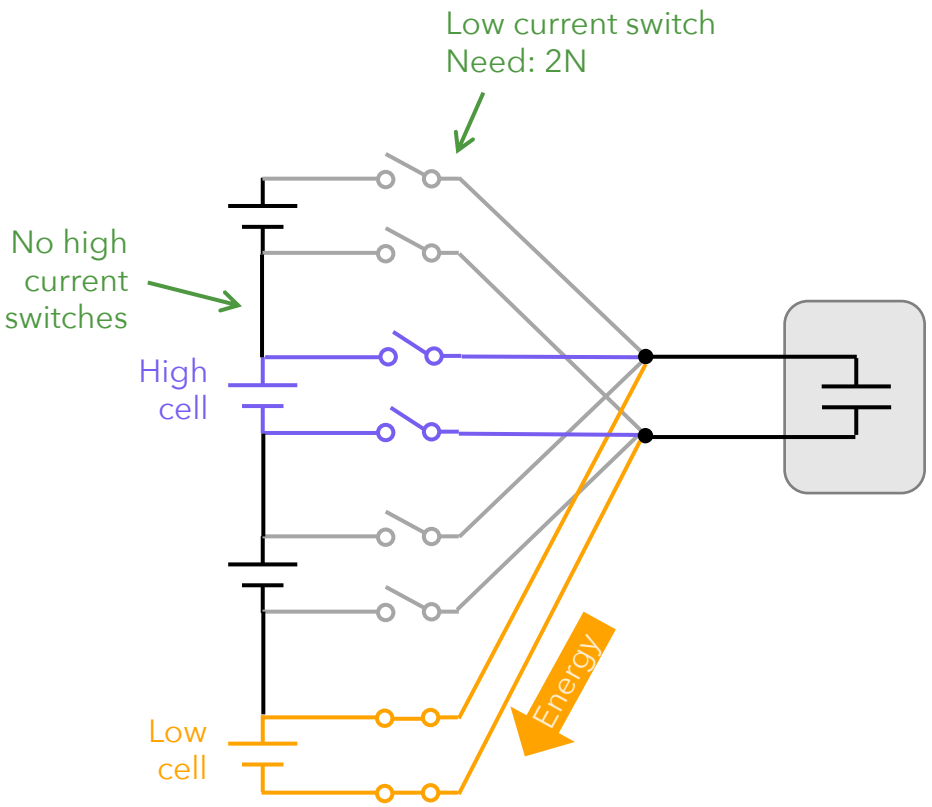

Storage circuit incorporating either:

- Capacitor
- Inductor

Active Balancing: Storage elements

Further resources:

→ Switching frequency allows control of current. Look up "switched capacitor circuit" for details.

→ Active cell balancing with inductors: https://www.nxp.com/docs/en/application-note/AN4428.pdf

→ Active cell balancing with transformers: https://www.analog.com/en/technical-articles/active-battery-cell-balancing.html

© Ania Mitros, PhD, 2024

Active balancing: Switch control

How to control all these switches?

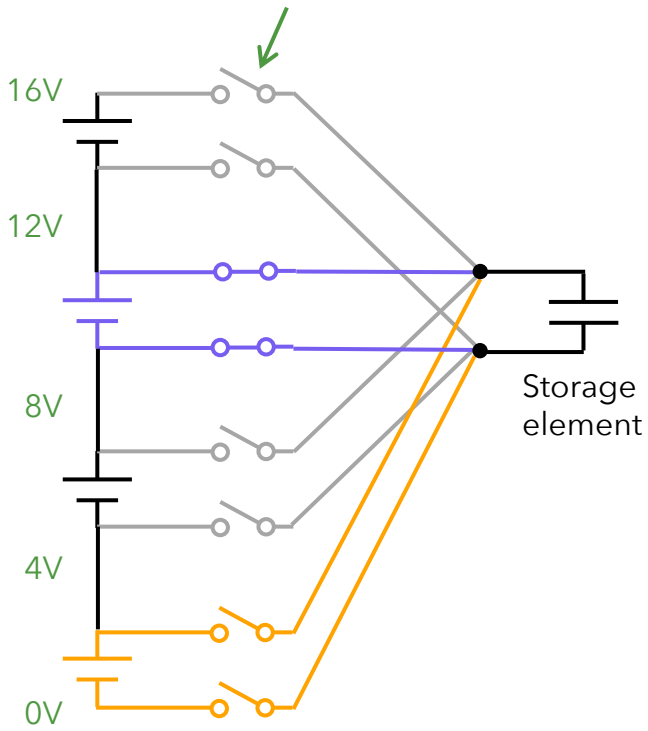

Relay

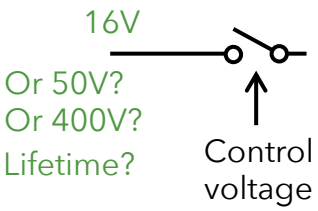

FET (Solid State)

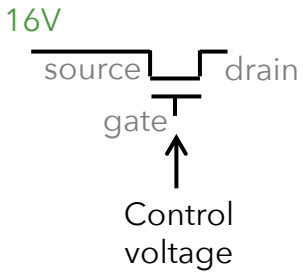

FET control
On: $V_{GATE} > V_{SOURCE} + V_{th}$
Off: $V_{GATE} = V_{SOURCE}$

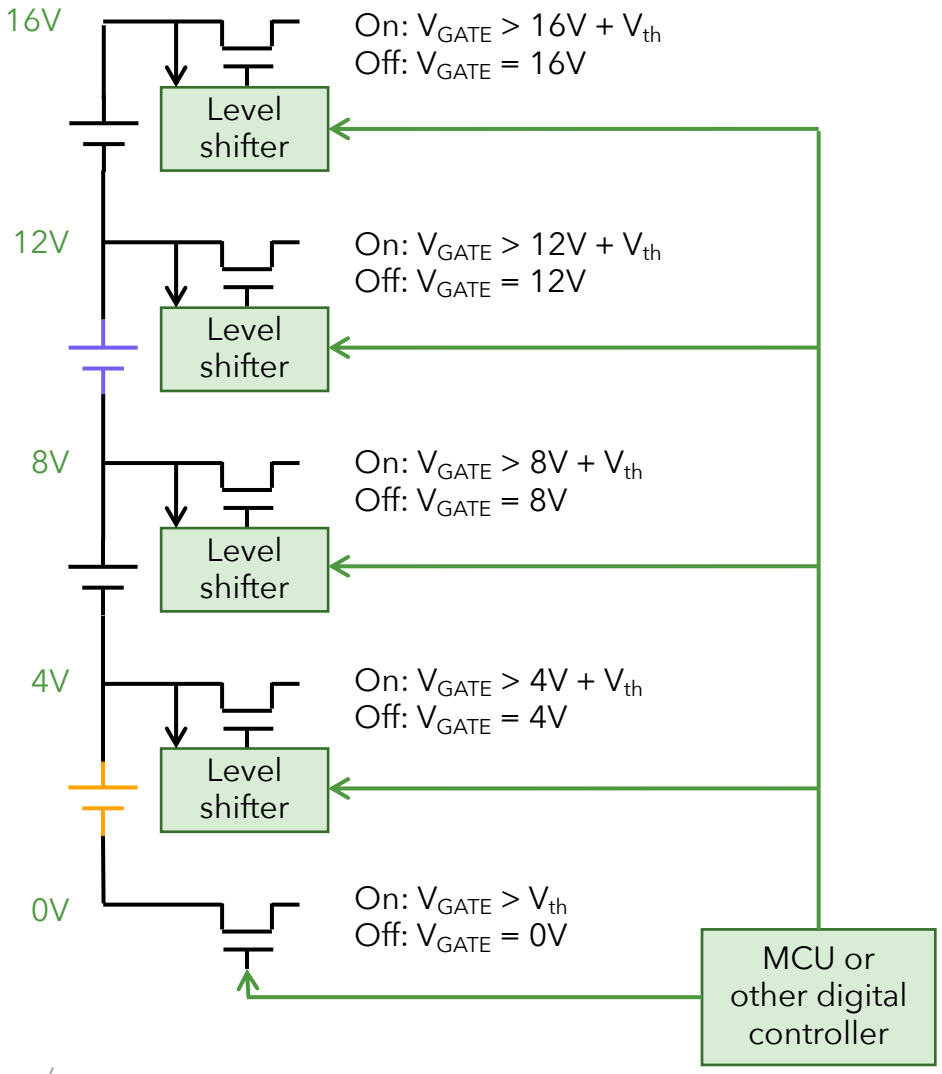

© Ania Mitros, PhD, 2024

Cell balancing

Video 1
- Introduction
- How much balancing current?

Video 2
- Passive vs Active balancing

Video 3
- Thermal considerations
  - …on PCB
  - …for BMS chips

Video 4
- When to balance
  - Relative to cell voltage m
  - At what SOC
    - LFP oh my!

© Ania Mitros, PhD, 2024

Cell balancing

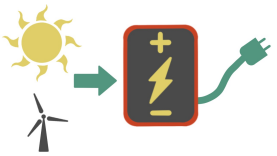

- Video 1 Introduction
- How much balancing current?
- Video 2 Passive vs Active balancing
- Video 3 Thermal considerations
  - …on PCB
  - …for BMS chips
- Video 4 When to balance
  - Relative to cell voltage measurement
  - At what SOC
    - LFP oh my!

© Ania Mitros, PhD, 2024

Balancing: Typical architecture

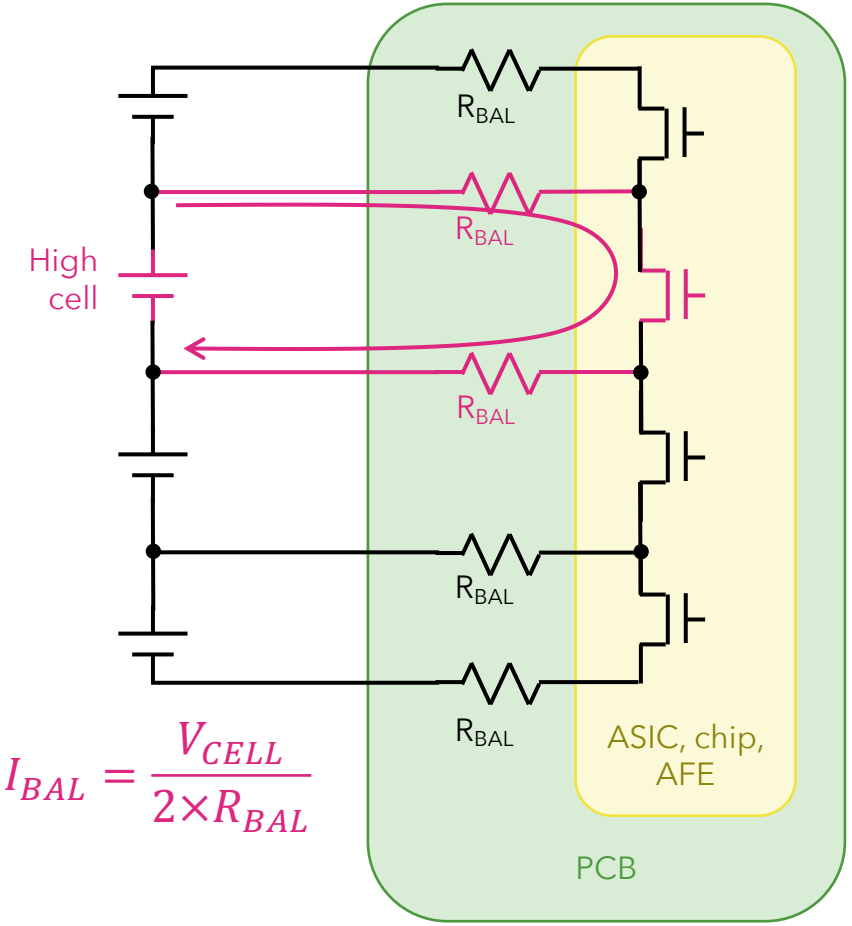

$$I_{BAL} = \frac{V_{CELL}}{2 \times R_{BAL}}$$

ASIC = Application-Specific Integrated Circuit
AFE = Analog Front End

PCB = printed circuit board

$$I_{BAL} = (15mA\ imbalance) \times \frac{24\ hours}{2\ hour} = 180mA$$

$$P_{BAL} = \frac{V_{CELL} \times I_{BAL}}{2} = \frac{(4V) \times (180mA)}{2} = \boxed{0.36W}$$

SMD resistor power ratings

Size	Power
0603	0.0625 W
0805	0.1 W
1206	0.125 W
1210	0.25 W
2512	0.50 W

Unlikely to meet reliability requirements

Solutions:

- Smaller balancing current
- Careful thermal design and series resistors

© Ania Mitros, PhD, 2024

Smaller balancing current

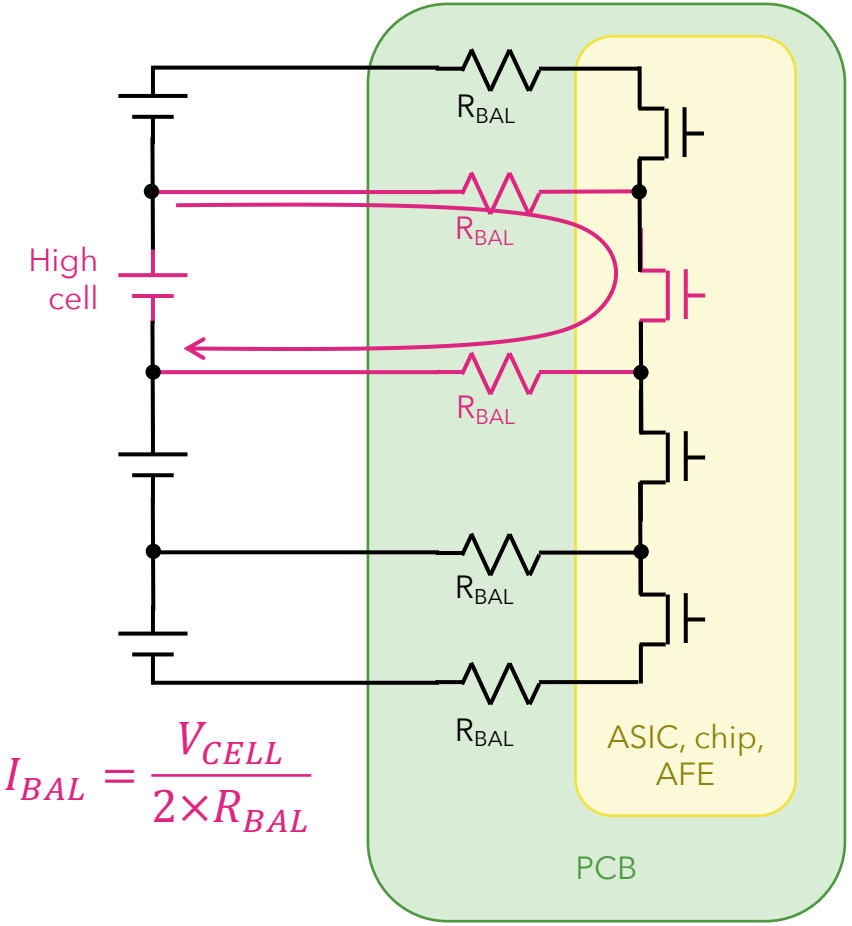

$$I_{BAL} = \frac{V_{CELL}}{2 \times R_{BAL}}$$

$$I_{BAL} = (15mA\ imbalance) \times \frac{24\ hours}{12\ hour} = 30mA$$

$$P_{BAL} = \frac{V_{CELL} \times I_{BAL}}{2} = \frac{(4V) \times (30mA)}{2} = \boxed{0.06W}$$

SMD resistor power ratings	
Size	Power
0603	0.0625 W
0805	0.1 W
1206	0.125 W
1210	0.25 W
2512	0.50 W

Ok!

Unlikely to meet reliability requirements

Solutions:

- Smaller balancing current
- Careful thermal design and series resistors

© Ania Mitros, PhD, 2024

Series resistors

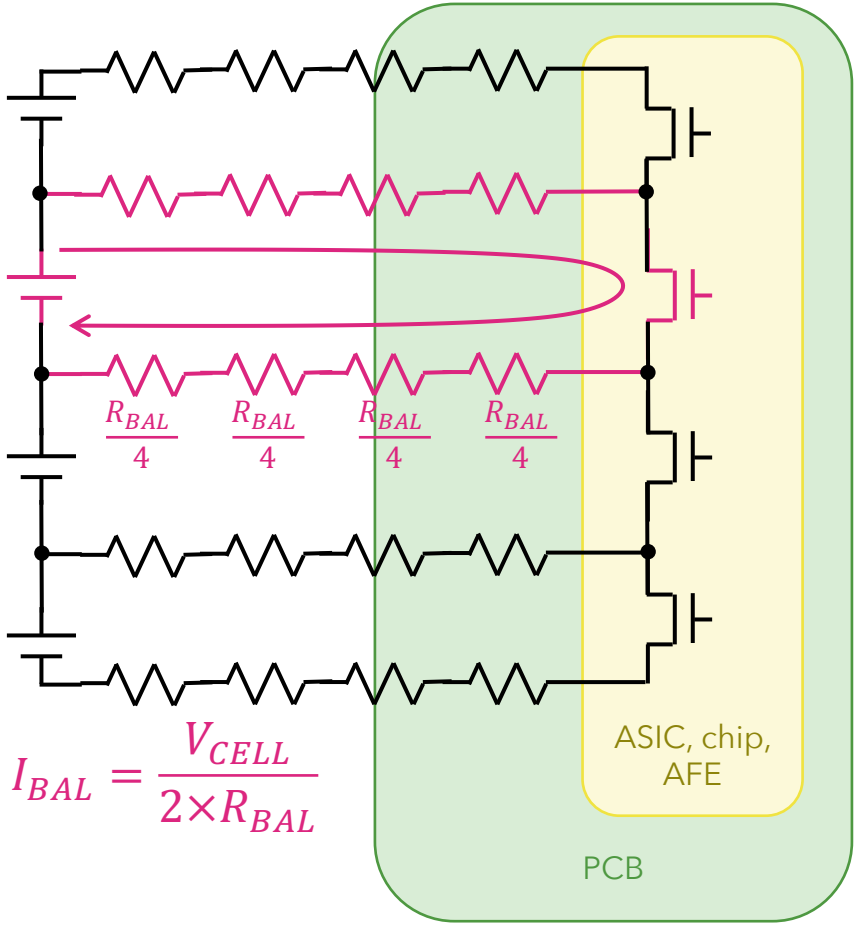

$$I_{BAL} = \frac{V_{CELL}}{2 \times R_{BAL}}$$

$$I_{BAL} = (15mA\ imbalance) \times \frac{24\ hours}{2\ hour} = 180mA$$

$$P_{BAL} = \frac{V_{CELL} \times I_{BAL}}{8} = \frac{(4V) \times (180mA)}{8} = \boxed{0.09W}$$ per resistor

SMD resistor power ratings	
Size	Power
0603	0.0625 W
0805	0.1 W
1206	0.125 W
1210	0.25 W
2512	0.50 W

Ok!

Unlikely to meet reliability requirements

Solutions:

- Smaller balancing current
- Careful thermal design and series resistors

$$P_{PCB} = (\#channels) \times V_{CELL} \times I_{BAL} = 6 \times (4V) \times (180mA) = \boxed{4.3W}$$

© Ania Mitros, PhD, 2024

4.3W on a PCB (with 180mA balancing for 6 cells)

Not on this board!

- Passive Cell Balancing Up to 200mA (Max)

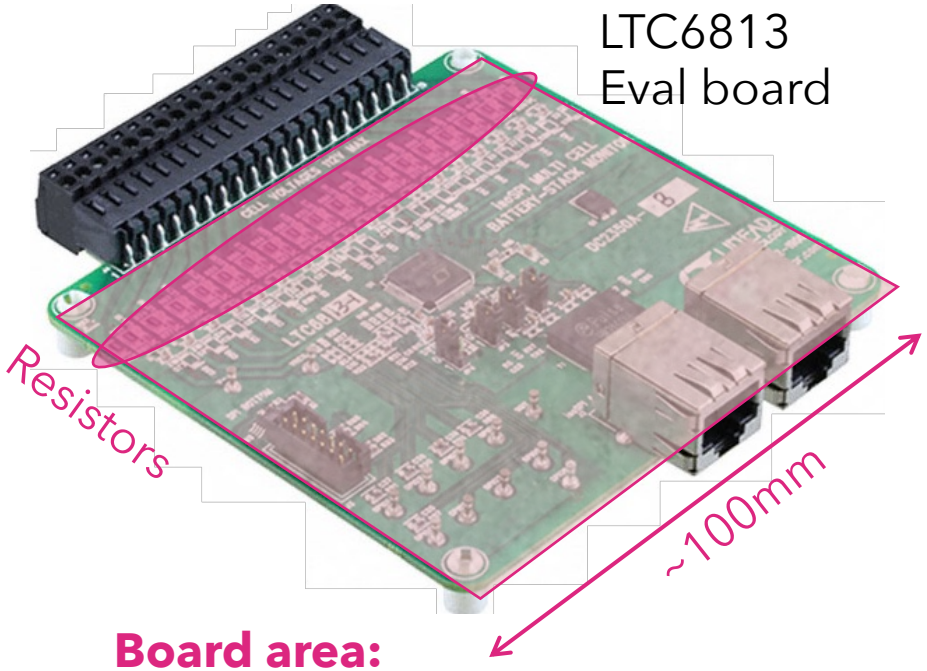

Board area:
A_{PCB} = 0.1 x 0.1 = 0.01m²

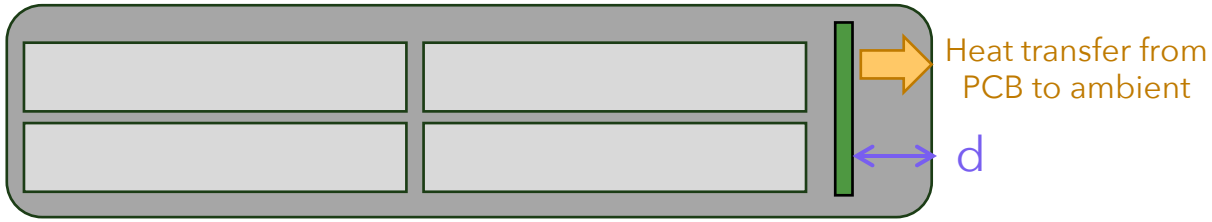

Heat transfer equation:

$$\frac{Q}{t} = P = \frac{\kappa \times A \times \Delta T}{d}$$

Q = heat
P = power (Watts)
κ = thermal conductivity
A = area
ΔT = temperature gradient
D = distance across gap

Thermal conductivity of air:
$\kappa(25°C) = 0.028\ W\ m^{-1}\ K^{-1}$ (at room temperature)

Temperature gradient:

$$\Delta T = \frac{P \times d}{A_{PCB} \times \kappa} = \frac{4.3W \times 0.01m}{0.01m^2 \times 0.28\ Wm^{-1}K^{-1}} = 153K = 153°C$$

© Ania Mitros, PhD, 2024

Reduce the watts!

Consider 30mA balancing current

$$P_{PCB} = (\#channels) \times V_{CELL} \times I_{BAL}$$

$$P_{PCB} = 6 \times (4V) \times (30mA) = 0.7W$$

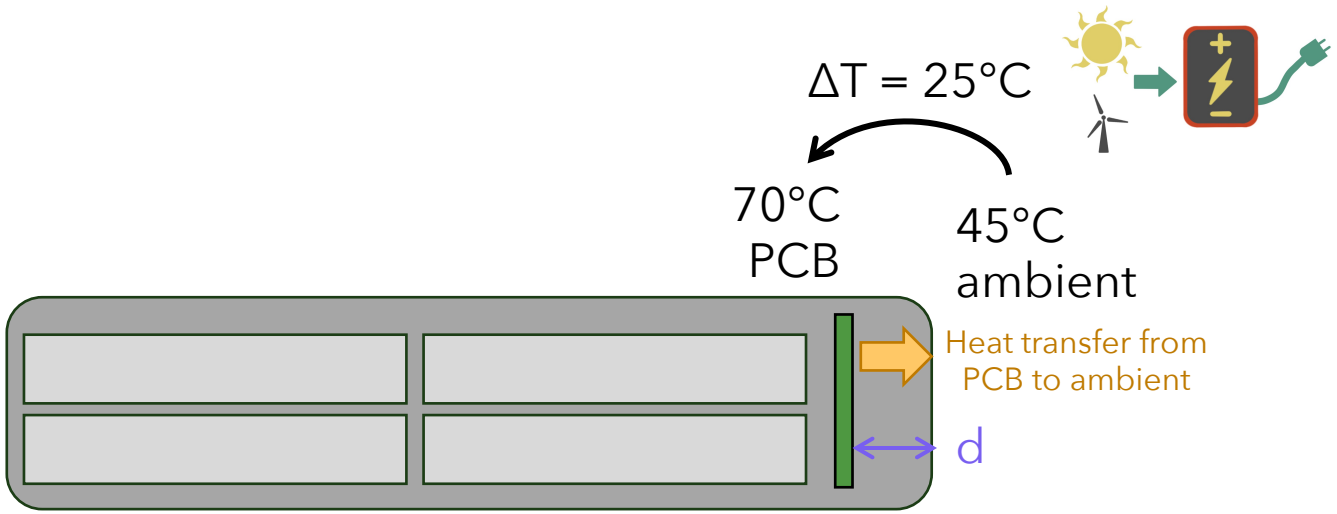

Heat transfer equation:

$$\frac{Q}{t} = P = \frac{\kappa \times A \times \Delta T}{d}$$

Thermal conductivity of air:

$\kappa(25°C) = 0.028\ W\ m^{-1}\ K^{-1}$ (at room temperature)

Temperature gradient:

$$\Delta T = \frac{P \times d}{A_{PCB} \times \kappa} = \frac{0.7W \times 0.01m}{0.01m^2 \times 0.28\ Wm^{-1}K^{-1}} = 25K = 25°C$$

© Ania Mitros, PhD, 2024

...or dissipate better!

Sidenote: Consider impact of heating the cells. Affects self-discharge (balancing) and cell aging.

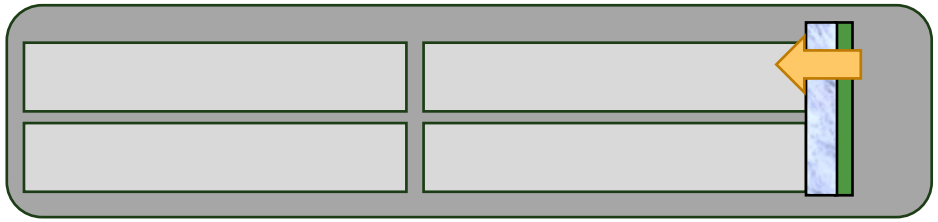

Heat transfer from PCB across 2 mm aluminum heat sink

Heat transfer equation:

$$\frac{Q}{t} = P = \frac{\kappa \times A \times \Delta T}{d}$$

Thermal conductivity of aluminum:

$\kappa(25°C) = 237\ W\ m^{-1}\ K^{-1}$ (at room temperature)

Temperature gradient:

$$\Delta T = \frac{P \times d}{A_{PCB} \times \kappa} = \frac{4.3W \times 0.002m}{0.01m^2 \times 237\ Wm^{-1}K^{-1}} = 0.004K = 0.004°C$$

0.004°C is not a real final value. Ignores thermal coupling from resistors to PCB, and laterally across PCB.

→ **The point: A heat sink really helps.**

© Ania Mitros, PhD, 2024

Summary: Balancing thermal considerations

- High balancing currents (ex. 180mA) require careful thermomechanical design and validation of the PCB
  - Component over-heating
  - Component reliability/lifetime degrades with operating temperature
- Lower balancing currents (ex. 30mA) are simpler to implement

© Ania Mitros, PhD, 2024

Cell balancing

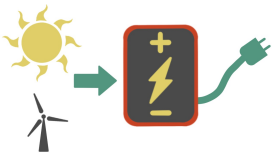

Video 1
- Introduction
- How much balancing current?

Video 2
- Passive vs Active balancing

Video 3
- Thermal considerations
  - …on PCB
  - …for BMS chips

Video 4
- When to balance
  - Relative to cell voltage measurement
  - At what SOC
    - LFP oh my!

© Ania Mitros, PhD, 2024

Compare three BMS chips balancing specs

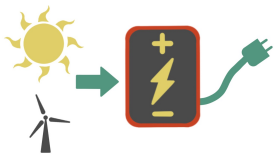

Balancing current per 1st page

2x resistance → 2x heating

$P = I^2 \times R$

One is different

Additional comments

I said: 70°C PCB is ok

bq79616 (Texas Instruments): 240 mA

		Min	Typ	Max	Unit
R_{DSON}	V_{CELL}>2.8V up to 125°C	1.45		4.6	Ω

Max of 8 cell in balancing at 75°C ambient

LTC6813 (Analog Devices): 200 mA

		Min	Typ	Max	Unit
Discharge Switch ON Resistance	V_{CELL}=3.6V, up to 125°C		4	10	Ω

200mA of Balancing Current (80mA if the die temperature is over 95°C).

TLE9012 (Infineon): 200 mA

		Min	Typ	Max	Unit
CB balancing switch on-state resistance	1.5V ≤ V_{CELL} ≤ 5V T_j = -40°C to +150°C I_{BAL} ≤ 150 mA	1.5	2.6	5.0	Ω
	1.5V ≤ V_{CELL} ≤ 5V T_j = -40°C to +150°C 150mA ≤ I_{BAL} ≤ 200 mA	1.6	2.8	5.6	Ω

---

similar

© Ania Mitros, PhD, 2024

Balancing and on-chip heat dissipation

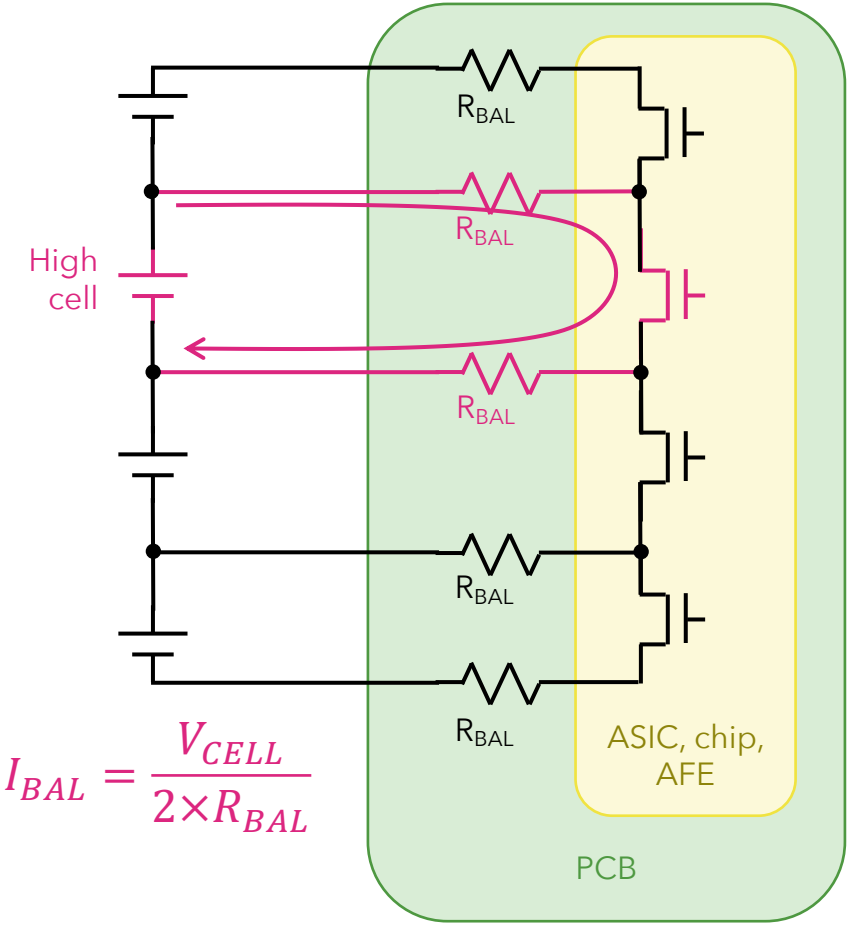

$$I_{BAL} = \frac{V_{CELL}}{2 \times R_{BAL}}$$

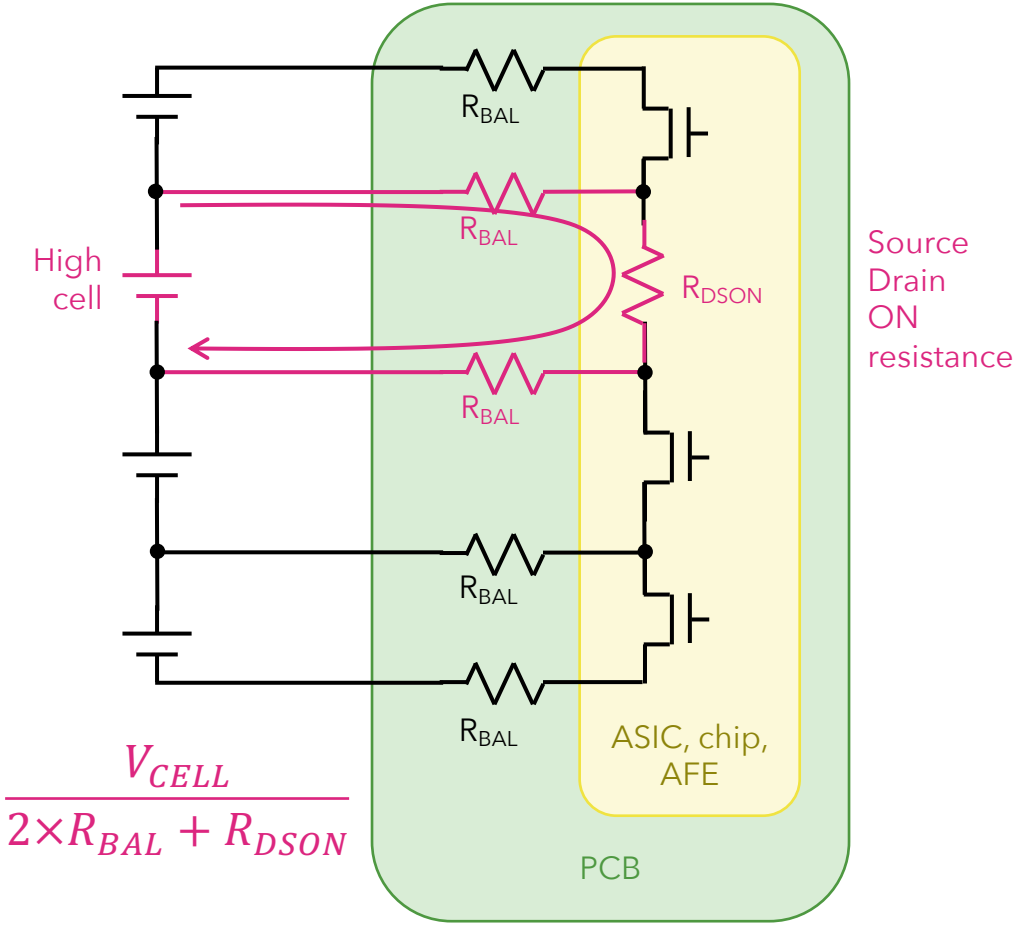

$$I_{BAL} = \frac{V_{CELL}}{2 \times R_{BAL} + R_{DSON}}$$

© Ania Mitros, PhD, 2024

On-chip heat dissipation

	max R_{DSON}	Power with 6 channels balancing at 200mA $P = 6 \times I^2 \times R_{DSON}$
bq79616 (Texas Instruments)	4.6 Ω	$P = 6 \times (240mA)^2 \times (4.6\Omega)$ $P = 1.6W$
LTC6813 (Analog Devices)	10 Ω	~~$P = 6 \times (200mA)^2 \times (10\Omega)$~~ ~~$P = 2.4W$~~ $P = 9 \times (200mA)^2 \times (10\Omega)$ $P = 3.6W$
TLE9012 (Infineon)	5.6 Ω	$P = 6 \times (200mA)^2 \times (5.6\Omega)$ $P = 1.3W$

$$I_{BAL} = \frac{V_{CELL}}{2 \times R_{BAL} + R_{DSON}}$$

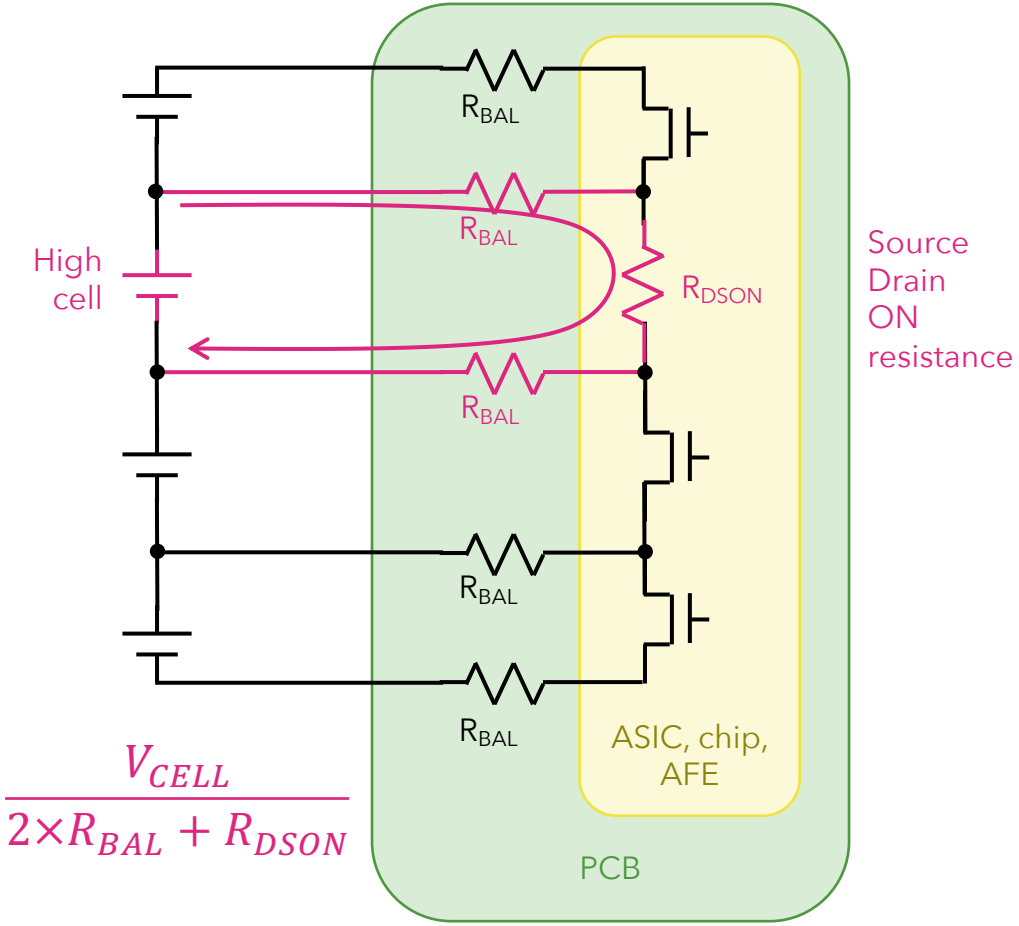

© Ania Mitros, PhD, 2024

Thermal specs for those three BMS chips

	bq79616 (Texas Instruments)	LTC6813 (Analog Devices)	TLE9012 (Infineon)
Exposed pad	yes	yes	yes
	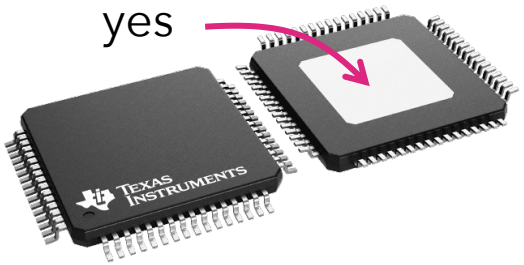 64 pin PowerPAD™ TQFP	64-Lead eLQFP Package	
R_{thJC}	8.7 °C/W	---	6 K/W
R_{thJA}	21.6 °C/W	34 °C/W	30 K/W

R_{th} = Thermal Resistance
JC = Junction to Case (top)
JA = Junction to Ambient (through exposed pad)

Exposed pad:
Provides thermal path from silicon die to PCB ground plane.

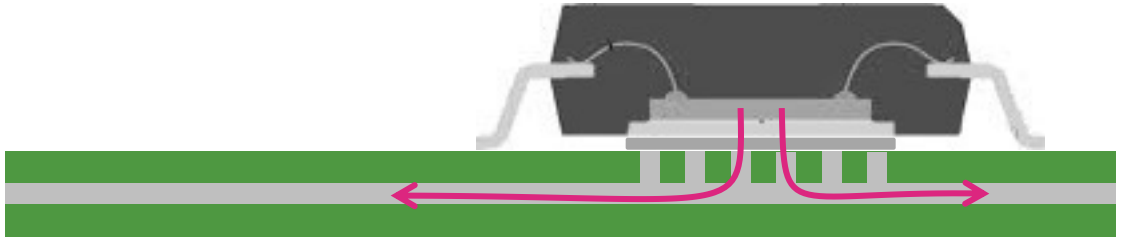

Sources:
- https://www.ti.com/product/BQ79616-Q1
- https://www.analog.com/media/en/package-pcb-resources/package/thermal-table.pdf
- https://www.infineon.com/dgdl/Infineon-TLE9012DQU-DataSheet-v01_00-EN.pdf?fileId=8ac78c8c7e7124d1017f0c3d27c75737

© Ania Mitros, PhD, 2024

On-chip temperature increase with balancing

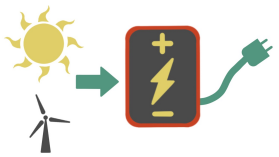

	Heat dissipation	R_{thJA}	R_{thJA}	Die temperature with 45°C ambient
bq79616 (Texas Instruments)	P = 1.6 W	21.6 °C/W	$\Delta T = \left(21.6\,°\frac{C}{W}\right) \times (1.6W) = 34.6°C$	79.6°C ✓
LTC6813 (Analog Devices)	P = 3.6 W	34 °C/W	$\Delta T = \left(34\,°\frac{C}{W}\right) \times (3.6W) = 122.4°C$	167.4°C ✗ Beyond chip operating temperature
TLE9012 (Infineon)	P = 1.3 W	30 K/W	$\Delta T = \left(30\,°\frac{C}{W}\right) \times (1.3W) = 39°C$	84°C ✓

Ok for operating temperature
Ok as intermittent state as far as reliability

→ Chips with exposed pads can dissipate internally-generated heat **if** PCB is near cell temperature.

→ Sensing die and board temperature during balancing may be worthwhile

© Ania Mitros, PhD, 2024

Summary: Thermal design for balancing

- Balancing resistors need to be physically sized to dissipate the expected amount of heat/power
- The ~200mA balancing currents promoted in many BMS chip datasheets require careful thermal design to ensure sensible PCB temperatures
- BMS chips balancing at ~200mA often feature an exposed pad, to provide a heat transfer pathway from the silicon die to the PCB ground plane
- Consider both typical operating temperature range and long-term reliability

© Ania Mitros, PhD, 2024

Cell balancing

Video 1
- Introduction
- How much balancing cur

Video 2
- Passive vs Active balanci

Video 3
- Thermal considerations
  - …on PCB
  - …for BMS chips

Video 4
- When to balance
  - Relative to cell voltage measurement
  - At what SOC
    - LFP oh my!

© Ania Mitros, PhD, 2024

Cell balancing

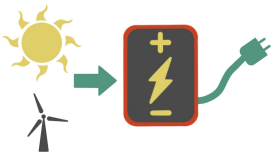

- Video 1 Introduction
- How much balancing current?
- Video 2 Passive vs Active balancing
- Video 3 Thermal considerations
  - …on PCB
  - …for BMS chips
- Video 4 When to balance
  - Relative to cell voltage measurement
  - At what SOC
    - LFP oh my!

© Ania Mitros, PhD, 2024

Balancing and cell voltage measurement

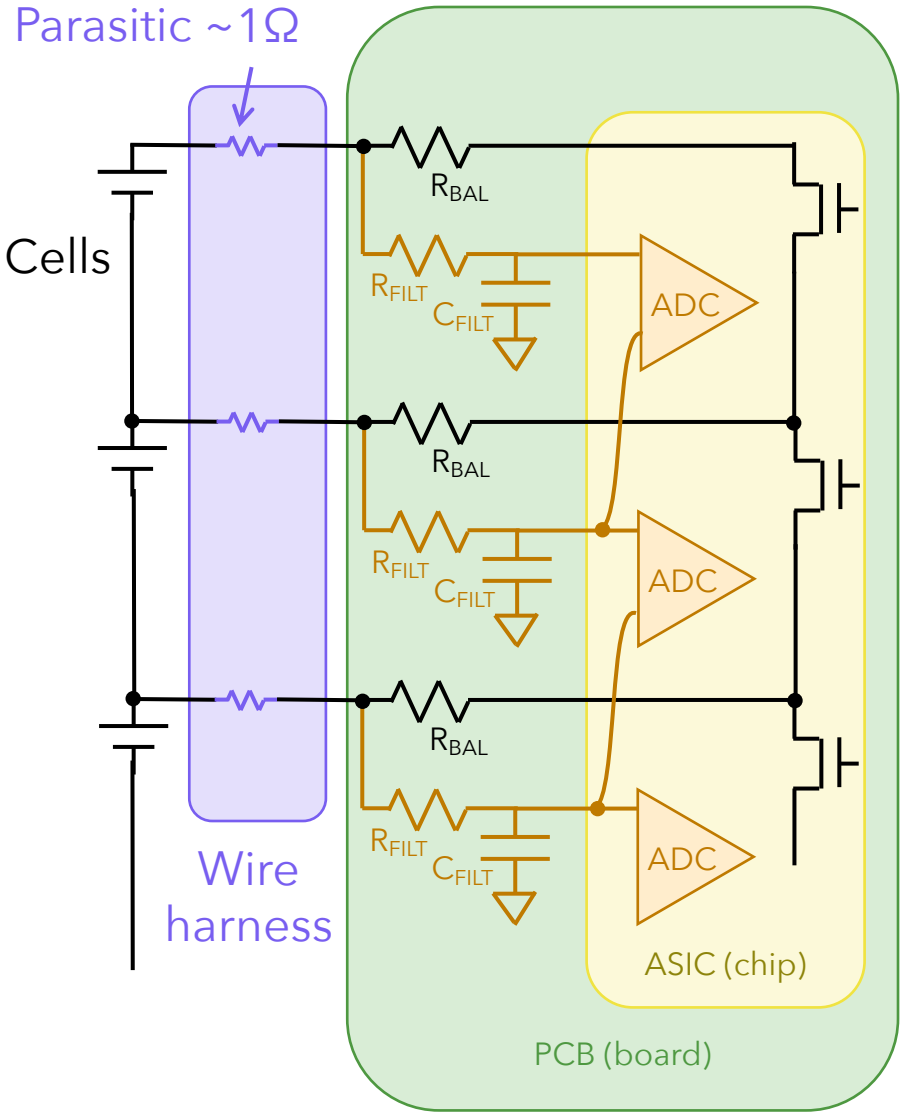

Measurement pathway: R_{FILT}, C_{FILT}, ADC

Balancing: R_{BAL}, MOSFET switches

© Ania Mitros, PhD, 2024

Balancing and cell voltage measurement

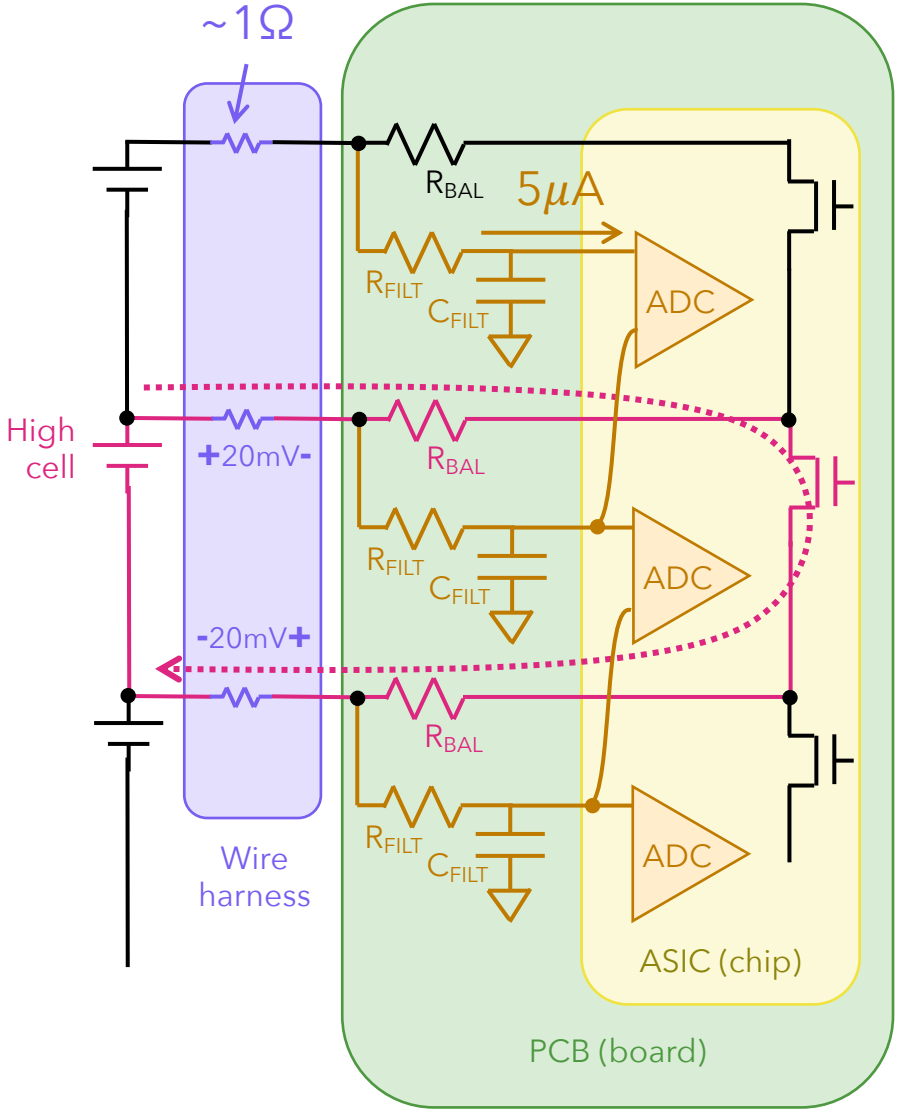

Error due to pin input current:

$$V_{ERR} = (5\mu A)\times(1\Omega) = 5\mu V$$

Error due to 20mA balancing current:

$$V_{ERR} = (20mA)\times 2\times(1\Omega) = 40mV$$

Dual harness:

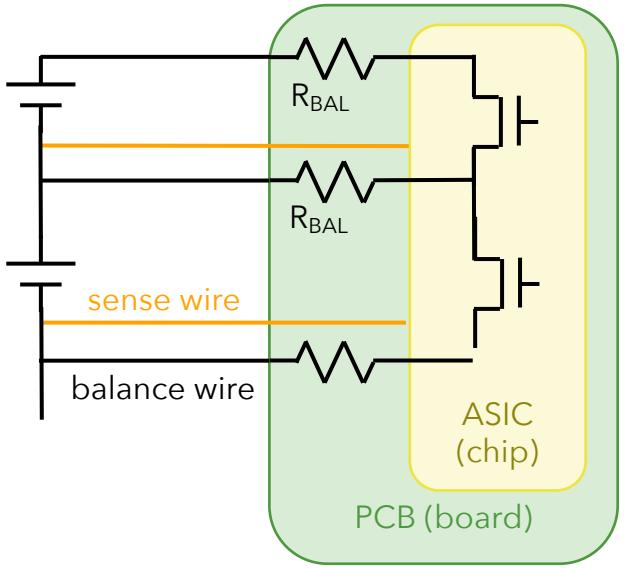

Interleave in time:

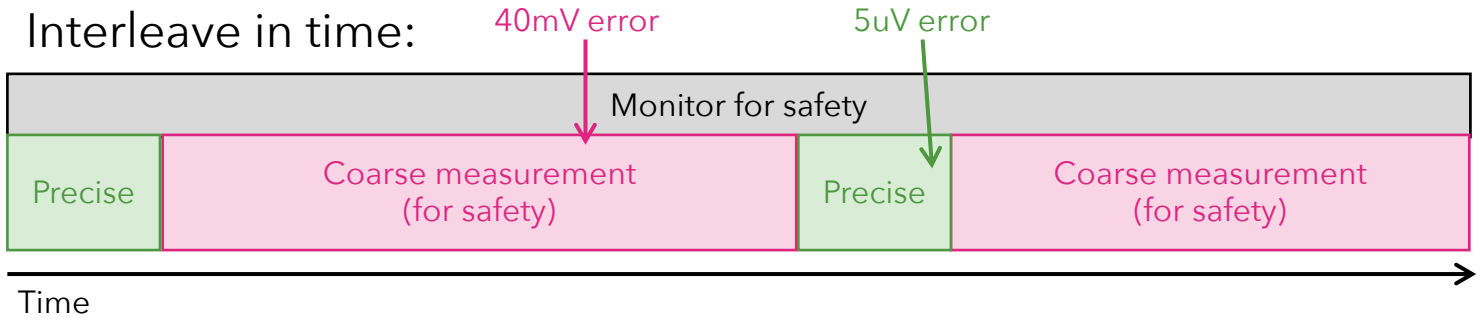

© Ania Mitros, PhD, 2024

Interleaving on timescale of hours

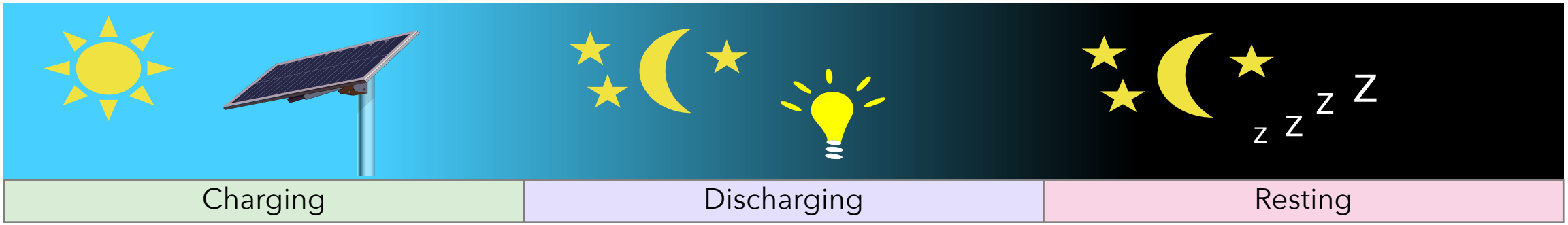

Interleave in time:

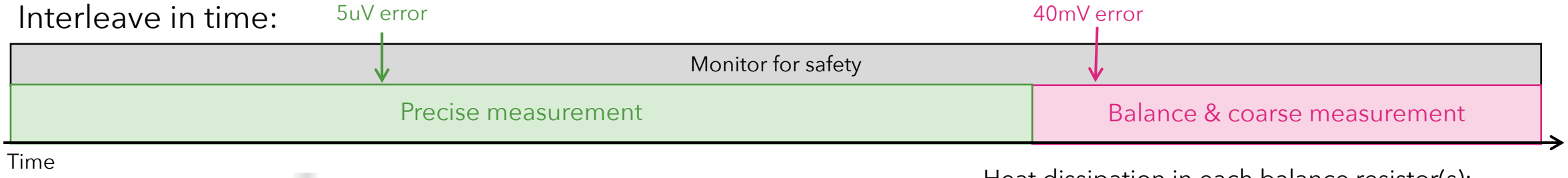

Example

Target: 17mA imbalance

Assume:

- 8 hours charging
- 8 hours discharging
- 8 hours resting

Balance current:

$$\underbrace{(24\ hours)\times(17mA\ imbalance)}_{\text{imbalance}} = \underbrace{(8\ hours)\times I_{BAL}}_{\text{correction}}$$

$$I_{BAL} = \frac{(24\ h)\times(17mA)}{8\ h} = 51mA \quad \text{(average)}$$

Since we balance odds or evens: $I_{BAL} = 102mA$

Heat dissipation in each balance resistor(s):

$$P_{RES} = V_{CELL}\times I_{BAL} = (4.2V)\times(102mA) = 0.43W$$

→ Implement as several series resistors

Heat dissipation on PCB:

$$P_{PCB} = 6\times P_{RES} = 2.6W$$

Heat dissipation inside chip:

$$P = 6\times I^2\times R_{DSON} = 6\times(102mA)^2\times 5\Omega = 0.3W$$

Chip with exposed pad will be hotter than PCB by:

$$\Delta T = \left(30\,°\frac{C}{W}\right)\times(0.3W) = 9°C$$

© Ania Mitros, PhD, 2024

Interleaving on timescale of 100s of ms

If application does not rest, or desire lower balance current… Interleave **on smaller timescale**.

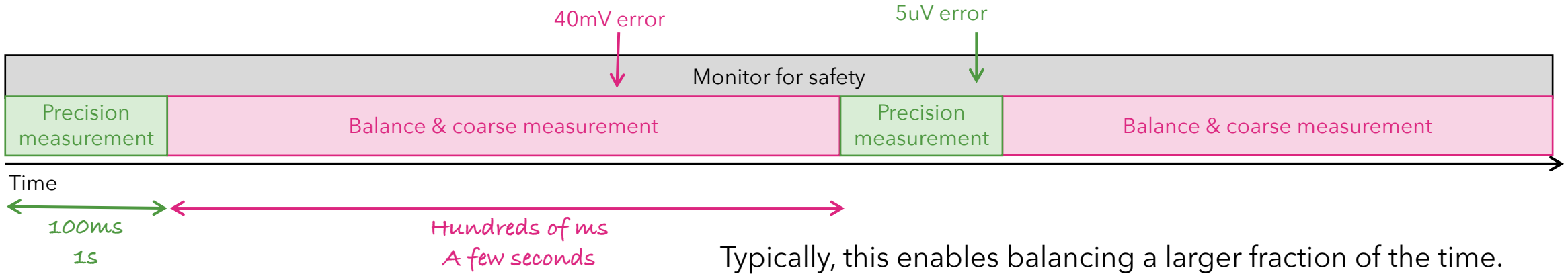

Choose time period longer than filter τ:

- bq79616: 6.5 Hz to 240 Hz
- LTC6813: 26 Hz to 27 kHz
- TLE9012: No internal filter

And a multiple of the frequency at which the microcontroller communicates with the BMS chip

Typically, this enables balancing a larger fraction of the time.
→ Can correct imbalance with lower balancing current

Balance current:

$$\underbrace{(10\ seconds)\times(17mA\ imbalance)}_{\text{imbalance}} = \underbrace{(9\ seconds)\times I_{BAL}}_{\text{correction}}$$

$$I_{BAL} = \frac{(10\ s)\times(19mA)}{9\ sh} = 19mA \quad \text{(average)}$$

Since we balance odds or evens: $I_{BAL} = 38mA$

In this example:

- 2.7× more balance time (as %)
- 2.7× lower balance current

© Ania Mitros, PhD, 2024

Balancing and cell voltage measurement

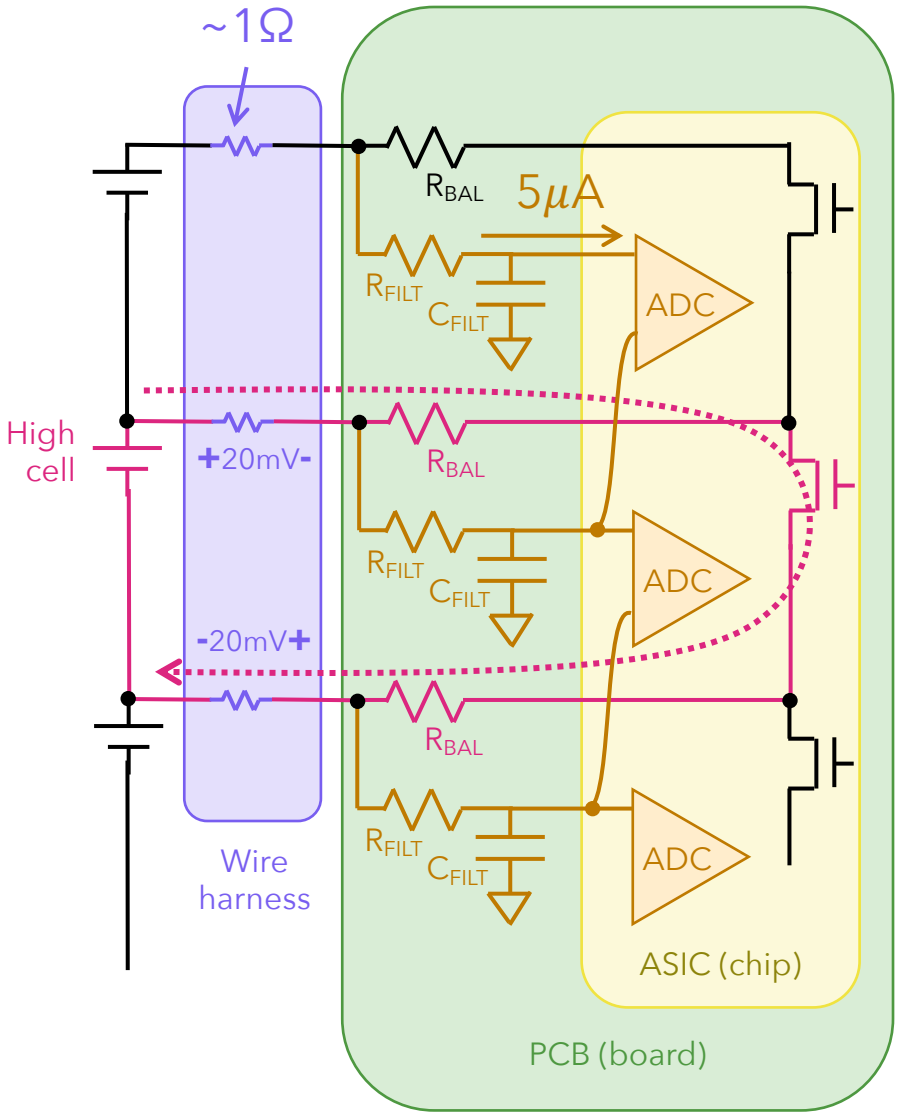

Error due to pin input current:

$$V_{ERR} = (5\mu A)\times(1\Omega) = 5\mu V$$

Error due to 20mA balancing current:

$$V_{ERR} = (20mA)\times 2\times(1\Omega) = 40mV$$

Firmware compensation:

$$V_{CELL} = V_{CELL}^{MEAS} - V_{COMP} \qquad V_{COMP} = I_{NOM}\times R_{NOM}$$

Low cost

Residual error: Function of variation in parasitic resistances R_K and magnitude of balancing currents I_K

$$V_{ERR} = (I_K\times R_K) - (I_{NOM}\times R_{NOM})$$

±30% ±50%

- May be ok for SOC estimation
- May be too much to assess pack imbalance

© Ania Mitros, PhD, 2024

Assess imbalance at what SOC?

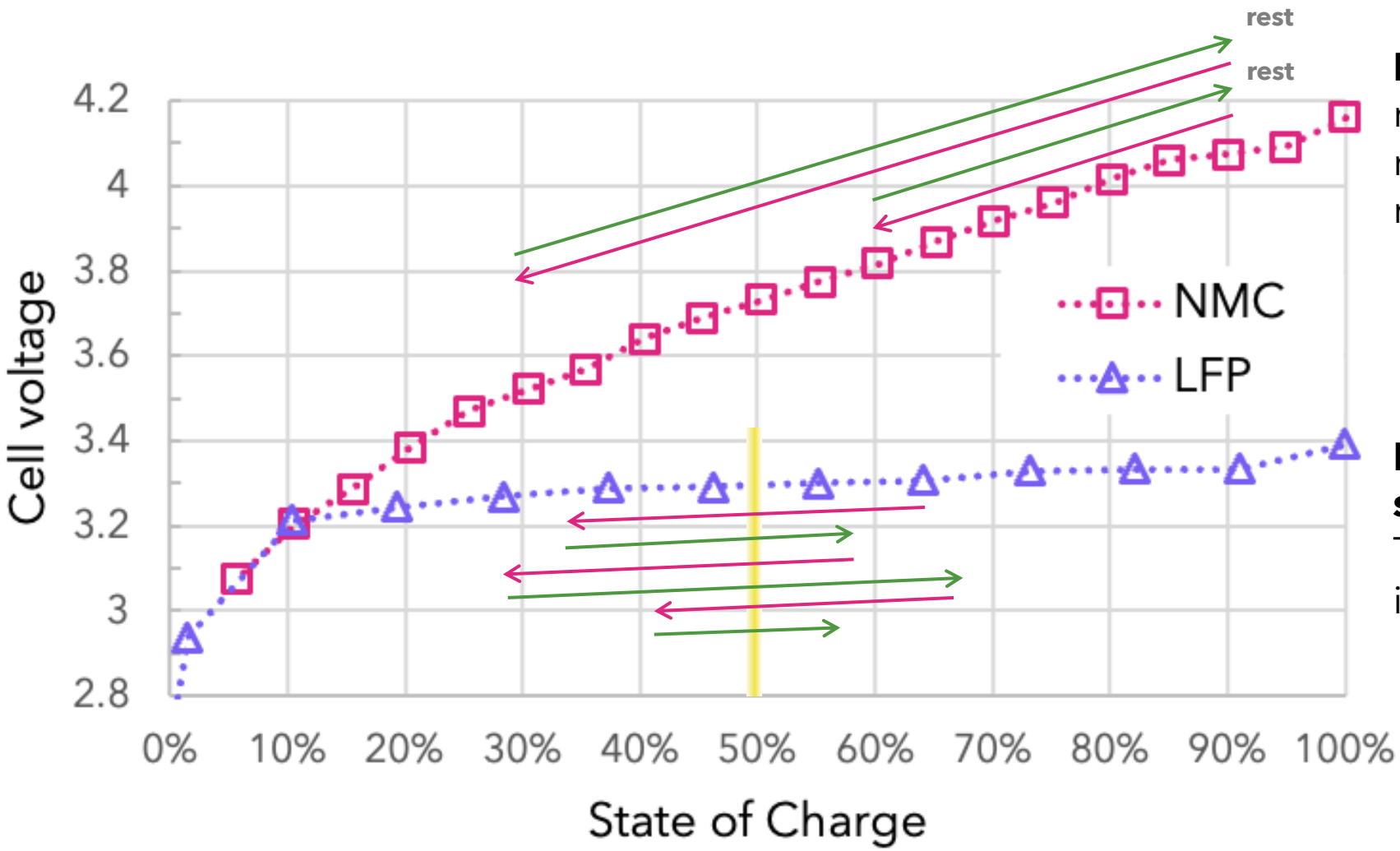

My car: Can decide how much to balance based on a measurement of a well-rested battery pack.

Energy storage for grid stability: Big challenge. Tough to detect imbalance in the very shallow slope.

© Ania Mitros, PhD, 2024

Balancing for energy storage systems (ESS)

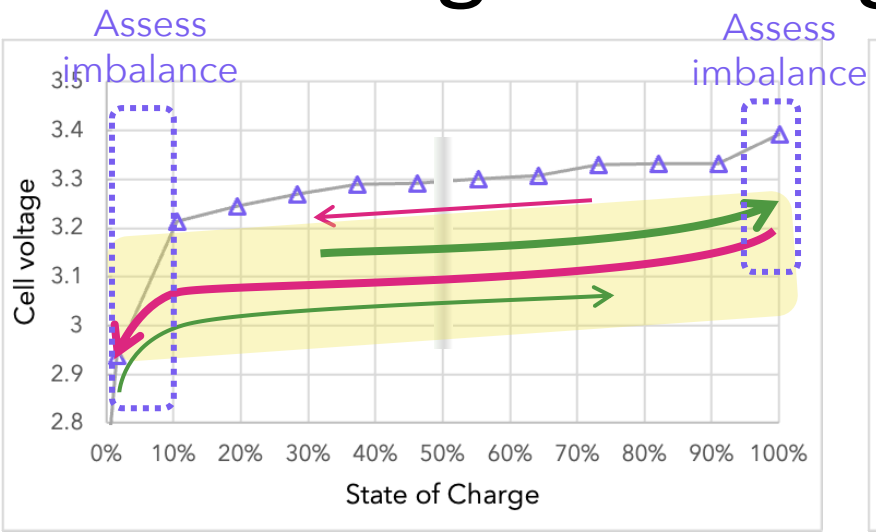

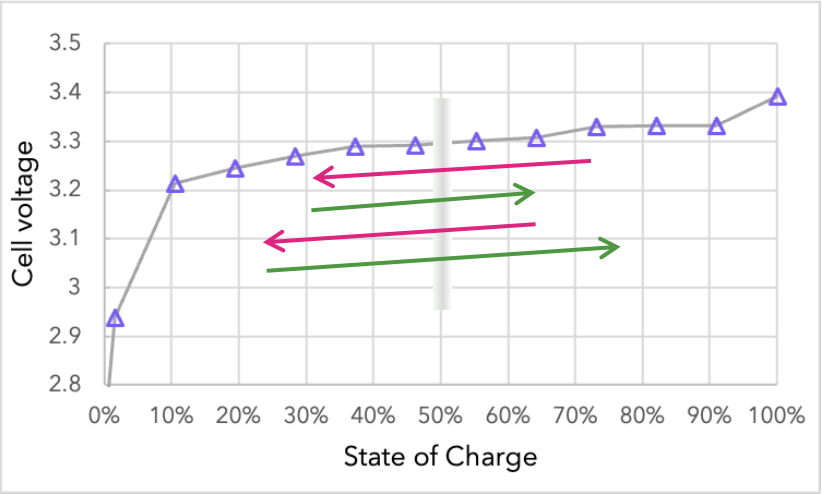

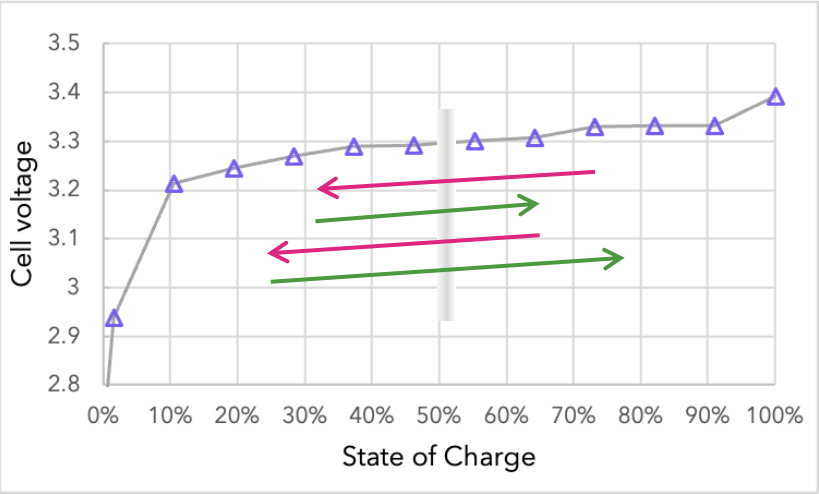

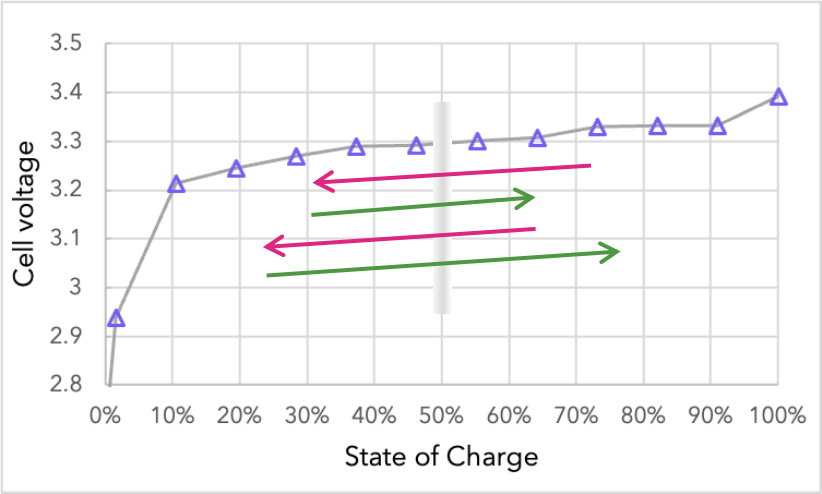

Challenge: Balancing LFP cells that are always mid-SOC

With multiple packs: Occasionally select one pack to cycle deeply and assess imbalance at a steep section of the voltage-SOC curve.

Implementation challenge: Coordination. Balancing is often is an *internal* pack function. Coordination requires imbalance to be *externally* communicated.

ESS = Energy Storage System, at some companies known simply as "battery"

© Ania Mitros, PhD, 2024

Summary: When to balance

- Balancing current causes a voltage drop along connection to the cells, causing measurement error $V_{ERR} = I_{BAL} \times R_{BAL}$
- Mitigations include:
  - Dual harness (separate sense and balance wires)
  - Interleaving precision measurement and balancing
    - On scale of hours
    - On scale of fractions of a second
  - Firmware compensation
- Assessment of the imbalance is best when pack is rested and at a steep part of OCV-SOC slope
  - which is challenging for LFP packs operated mid-range

© Ania Mitros, PhD, 2024

© Ania Mitros, PhD, 2024

https://ofb.net/~ania/Anias-BMS-course/

"The End" by Gerd Altmann from Pixabay